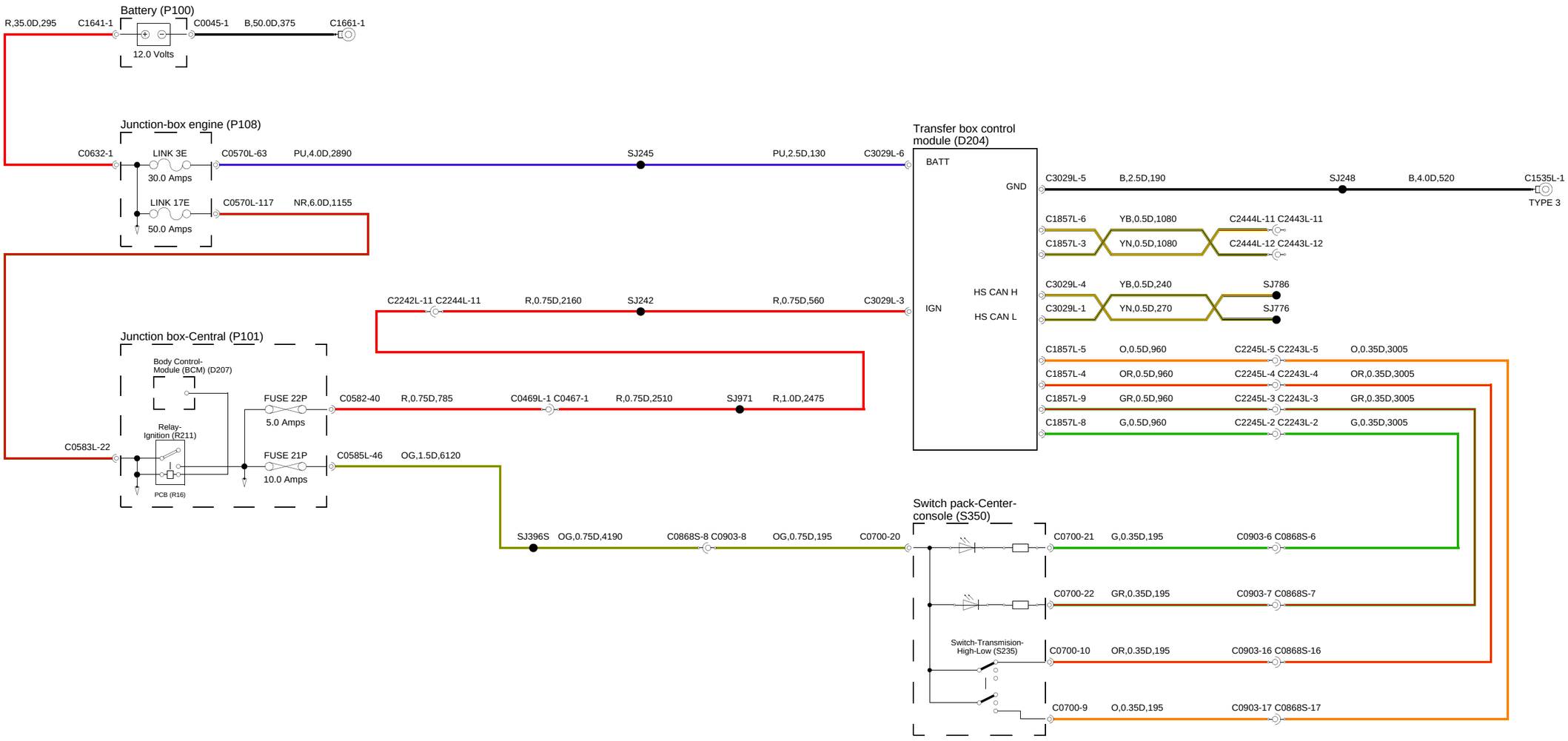
Battery (P100)
R,35.0D,295
C1641-1
C0045-1
B,50.0D,375
C1661-1
12.0 Volts
Junction-box engine (P108)
C0632-1
LINK 3E
30.0 Amps
C0570L-63
PU,4.0D,2890
SJ245
PU,2.5D,130
C3029L-6
LINK 17E
50.0 Amps
C0570L-117
NR,6.0D,1155
Transfer box control module (D204)
BATT
GND
C3029L-5
B,2.5D,190
SJ248
B,4.0D,520
C1535L-1
TYPE 3
C1857L-6
YB,0.5D,1080
C2444L-11 C2443L-11
C1857L-3
YN,0.5D,1080
C2444L-12 C2443L-12
HS CAN H
HS CAN L
IGN
C3029L-4
YB,0.5D,240
SJ786
C3029L-1
YN,0.5D,270
SJ776
C2242L-11 C2244L-11
R,0.75D,2160
SJ242
R,0.75D,560
C3029L-3
Junction box-Central (P101)
Body Control-Module (BCM) (D207)
FUSE 22P
5.0 Amps
C0582-40
R,0.75D,785
C0469L-1 C0467-1
R,0.75D,2510
SJ971
R,1.0D,2475
Relay-Ignition (R211)
C0583L-22
FUSE 21P
10.0 Amps
C0585L-46
OG,1.5D,6120
PCB (R16)
C1857L-5
O,0.5D,960
C2245L-5 C2243L-5
O,0.35D,3005
C1857L-4
OR,0.5D,960
C2245L-4 C2243L-4
OR,0.35D,3005
C1857L-9
GR,0.5D,960
C2245L-3 C2243L-3
GR,0.35D,3005
C1857L-8
G,0.5D,960
C2245L-2 C2243L-2
G,0.35D,3005
Switch pack-Center-console (S350)
SJ396S
OG,0.75D,4190
C0868S-8 C0903-8
OG,0.75D,195
C0700-20
C0700-21
G,0.35D,195
C0903-6 C0868S-6
C0700-22
GR,0.35D,195
C0903-7 C0868S-7
Switch-Transmision-High-Low (S235)
C0700-10
OR,0.35D,195
C0903-16 C0868S-16
C0700-9
O,0.35D,195
C0903-17 C0868S-17

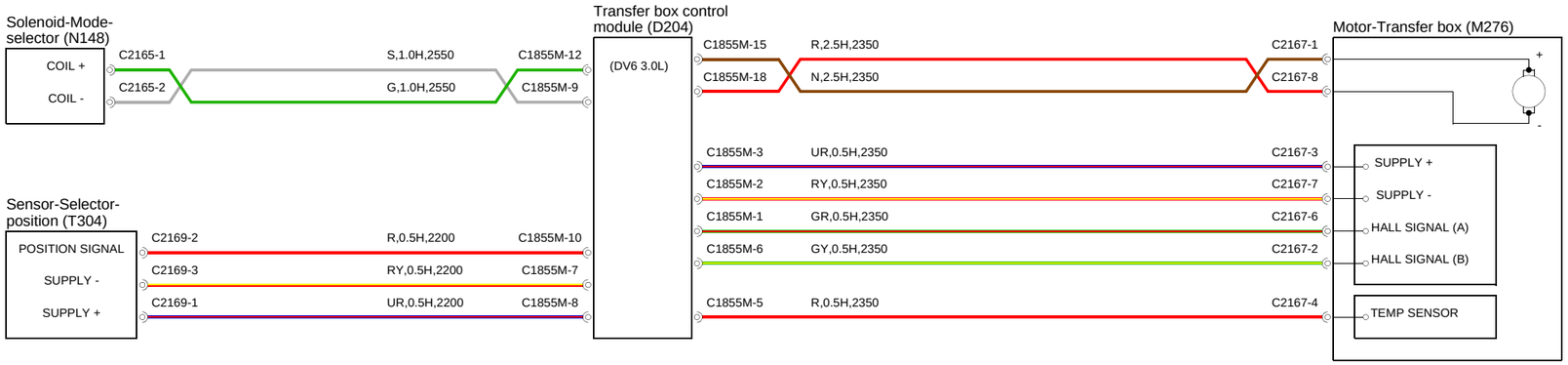
Solenoid-Mode-selector (N148)
COIL +
COIL -
C2165-1
C2165-2
S,1.0H,2550
G,1.0H,2550
C1855M-12
C1855M-9
Sensor-Selector-position (T304)
POSITION SIGNAL
SUPPLY -
SUPPLY +
C2169-2
C2169-3
C2169-1
R,0.5H,2200
RY,0.5H,2200
UR,0.5H,2200
C1855M-10
C1855M-7
C1855M-8
Transfer box control module (D204)
(DV6 3.0L)
C1855M-15
C1855M-18
C1855M-3
C1855M-2
C1855M-1
C1855M-6
C1855M-5
R,2.5H,2350
N,2.5H,2350
UR,0.5H,2350
RY,0.5H,2350
GR,0.5H,2350
GY,0.5H,2350
R,0.5H,2350
C2167-1
C2167-8
C2167-3
C2167-7
C2167-6
C2167-2
C2167-4
Motor-Transfer box (M276)
+
-
SUPPLY +
SUPPLY -
HALL SIGNAL (A)
HALL SIGNAL (B)
TEMP SENSOR

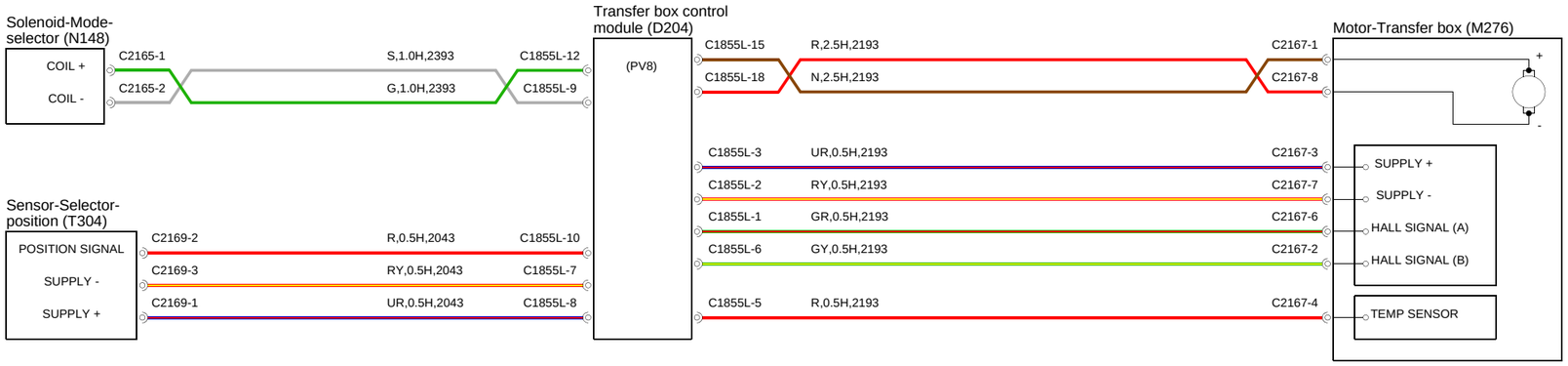
Solenoid-Mode-selector (N148)
COIL +
COIL -
C2165-1
C2165-2
S,1.0H,2393
G,1.0H,2393
C1855L-12
C1855L-9
Sensor-Selector-position (T304)
POSITION SIGNAL
SUPPLY -
SUPPLY +
C2169-2
C2169-3
C2169-1
R,0.5H,2043
RY,0.5H,2043
UR,0.5H,2043
C1855L-10
C1855L-7
C1855L-8
Transfer box control module (D204)
(PV8)
C1855L-15
C1855L-18
C1855L-3
C1855L-2
C1855L-1
C1855L-6
C1855L-5
R,2.5H,2193
N,2.5H,2193
UR,0.5H,2193
RY,0.5H,2193
GR,0.5H,2193
GY,0.5H,2193
R,0.5H,2193
C2167-1
C2167-8
C2167-3
C2167-7
C2167-6
C2167-2
C2167-4
Motor-Transfer box (M276)
+
-
SUPPLY +
SUPPLY -
HALL SIGNAL (A)
HALL SIGNAL (B)
TEMP SENSOR

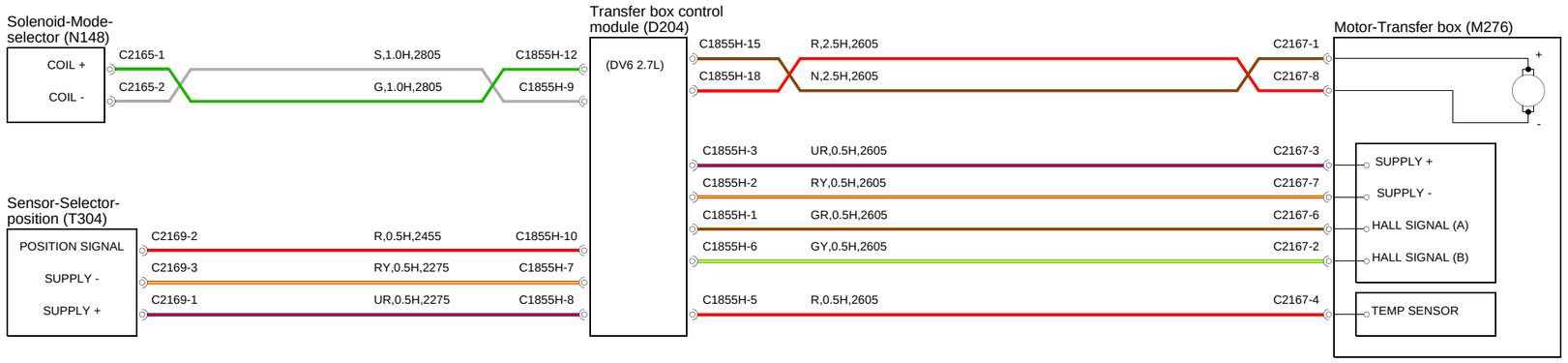
Solenoid-Mode-selector (N148)
COIL +
COIL -
C2165-1
C2165-2
S,1.0H,2805
G,1.0H,2805
C1855H-12
C1855H-9
Sensor-Selector-position (T304)
POSITION SIGNAL
SUPPLY -
SUPPLY +
C2169-2
C2169-3
C2169-1
R,0.5H,2455
RY,0.5H,2275
UR,0.5H,2275
C1855H-10
C1855H-7
C1855H-8
Transfer box control module (D204)
(DV6 2.7L)
C1855H-15
C1855H-18
R,2.5H,2605
N,2.5H,2605
C1855H-3
C1855H-2
C1855H-1
C1855H-6
C1855H-5
UR,0.5H,2605
RY,0.5H,2605
GR,0.5H,2605
GY,0.5H,2605
R,0.5H,2605
Motor-Transfer box (M276)
C2167-1
C2167-8
C2167-3
C2167-7
C2167-6
C2167-2
C2167-4
+
-
SUPPLY +
SUPPLY -
HALL SIGNAL (A)
HALL SIGNAL (B)
TEMP SENSOR

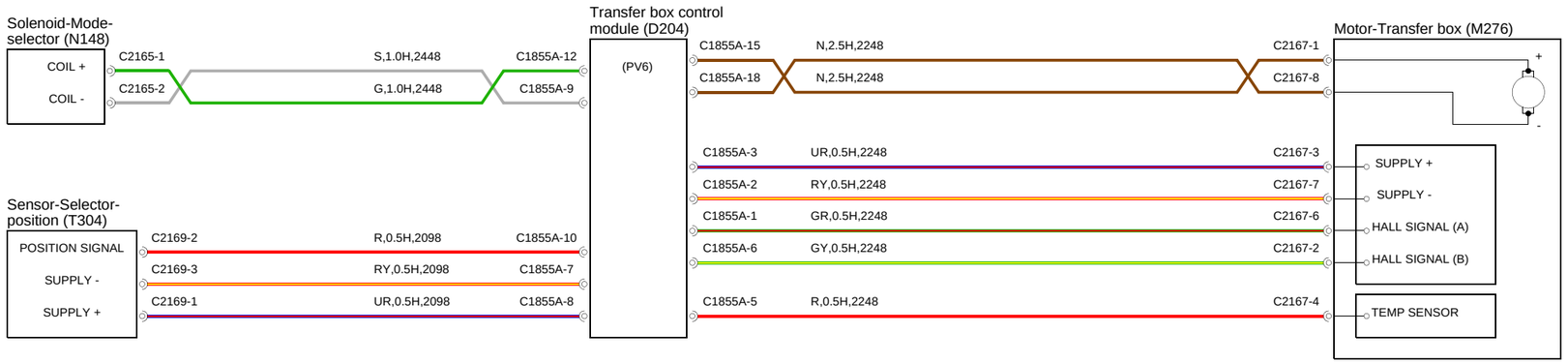
Solenoid-Mode-selector (N148)
COIL +
COIL -
C2165-1
C2165-2
S,1.0H,2448
G,1.0H,2448
C1855A-12
C1855A-9
Sensor-Selector-position (T304)
POSITION SIGNAL
SUPPLY -
SUPPLY +
C2169-2
C2169-3
C2169-1
R,0.5H,2098
RY,0.5H,2098
UR,0.5H,2098
C1855A-10
C1855A-7
C1855A-8
Transfer box control module (D204)
(PV6)
C1855A-15
C1855A-18
N,2.5H,2248
N,2.5H,2248
C1855A-3
C1855A-2
C1855A-1
C1855A-6
C1855A-5
UR,0.5H,2248
RY,0.5H,2248
GR,0.5H,2248
GY,0.5H,2248
R,0.5H,2248
Motor-Transfer box (M276)
C2167-1
C2167-8
C2167-3
C2167-7
C2167-6
C2167-2
C2167-4
+
-
SUPPLY +
SUPPLY -
HALL SIGNAL (A)
HALL SIGNAL (B)
TEMP SENSOR