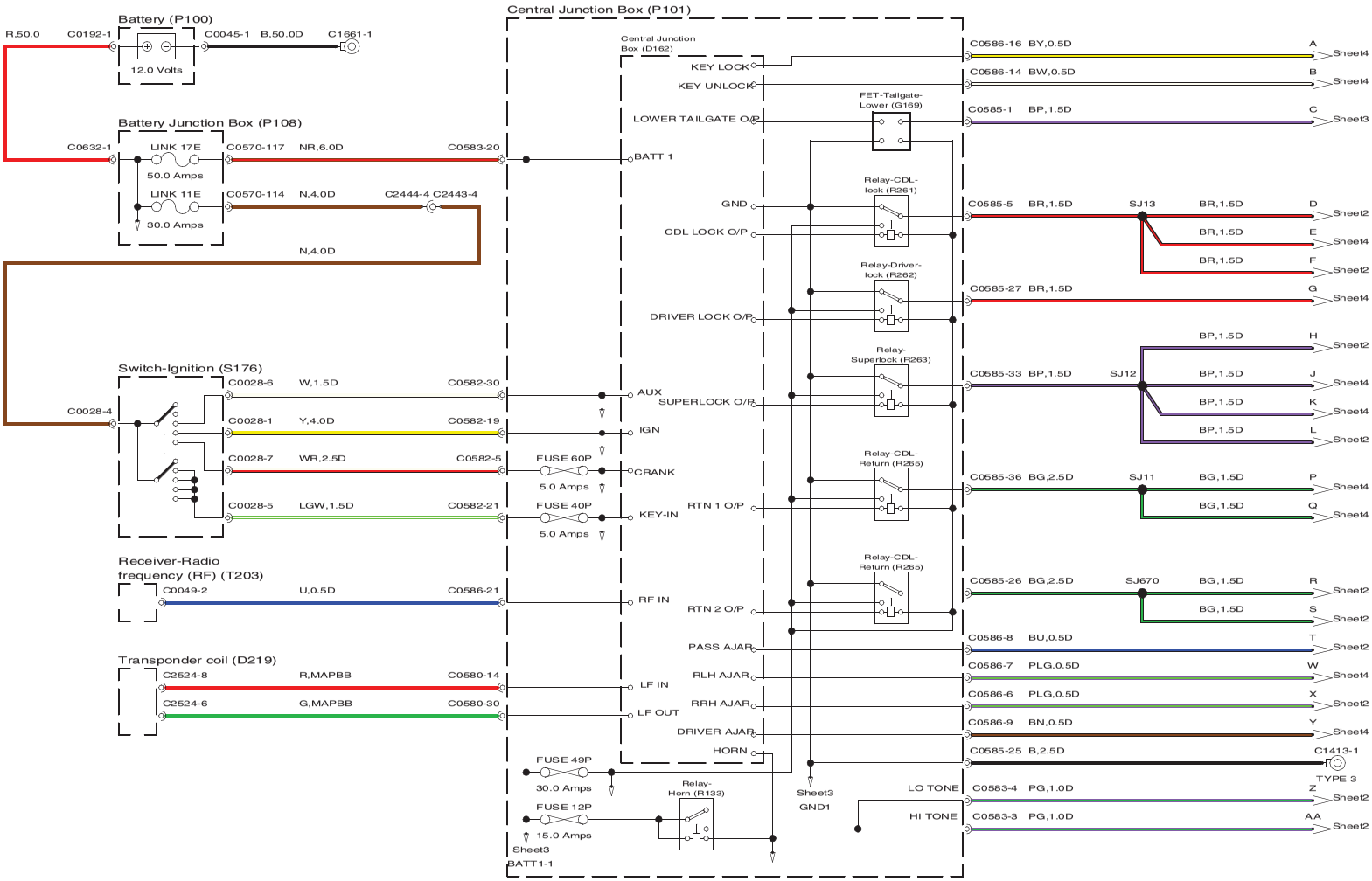
Battery (P100)
12.0 Volts
R,50.0
C0192-1
C0045-1
B,50.0D
C1661-1
Battery Junction Box (P108)
C0632-1
LINK 17E
50.0 Amps
LINK 11E
30.0 Amps
C0570-117
NR,6.0D
C0583-20
C0570-114
N,4.0D
C2444-4 C2443-4
N,4.0D
Switch-Ignition (S176)
C0028-4
C0028-6
W,1.5D
C0582-30
C0028-1
Y,4.0D
C0582-19
C0028-7
WR,2.5D
C0582-5
C0028-5
LGW,1.5D
C0582-21
Receiver-Radio frequency (RF) (T203)
C0049-2
U,0.5D
C0586-21
Transponder coil (D219)
C2524-8
R,MAPBB
C0580-14
C2524-6
G,MAPBB
C0580-30
Central Junction Box (P101)
Central Junction Box (D162)
KEY LOCK
KEY UNLOCK
LOWER TAILGATE O/P
BATT 1
GND
CDL LOCK O/P
DRIVER LOCK O/P
AUX
SUPERLOCK O/P
IGN
CRANK
KEY-IN
RTN 1 O/P
RF IN
RTN 2 O/P
PASS AJAR
RLH AJAR
RRH AJAR
DRIVER AJAR
HORN
LF IN
LF OUT
FET-Tailgate-Lower (G169)
Relay-CDL-lock (R261)
Relay-Driver-lock (R262)
Relay-Superlock (R263)
Relay-CDL-Return (R265)
Relay-CDL-Return (R265)
FUSE 60P
5.0 Amps
FUSE 40P
5.0 Amps
FUSE 49P
30.0 Amps
FUSE 12P
15.0 Amps
Relay-Horn (R133)
Sheet3
BATT1-1
Sheet3
GND1
LO TONE
HI TONE
C0586-16 BY,0.5D
C0586-14 BW,0.5D
C0585-1 BP,1.5D
C0585-5 BR,1.5D
SJ13
BR,1.5D
C0585-27 BR,1.5D
C0585-33 BP,1.5D
SJ12
BP,1.5D
C0585-36 BG,2.5D
SJ11
BG,1.5D
C0585-26 BG,2.5D
SJ670
BG,1.5D
C0586-8 BU,0.5D
C0586-7 PLG,0.5D
C0586-6 PLG,0.5D
C0586-9 BN,0.5D
C0585-25 B,2.5D
C1413-1
TYPE 3
C0583-4 PG,1.0D
C0583-3 PG,1.0D
Sheet4
Sheet3
Sheet2

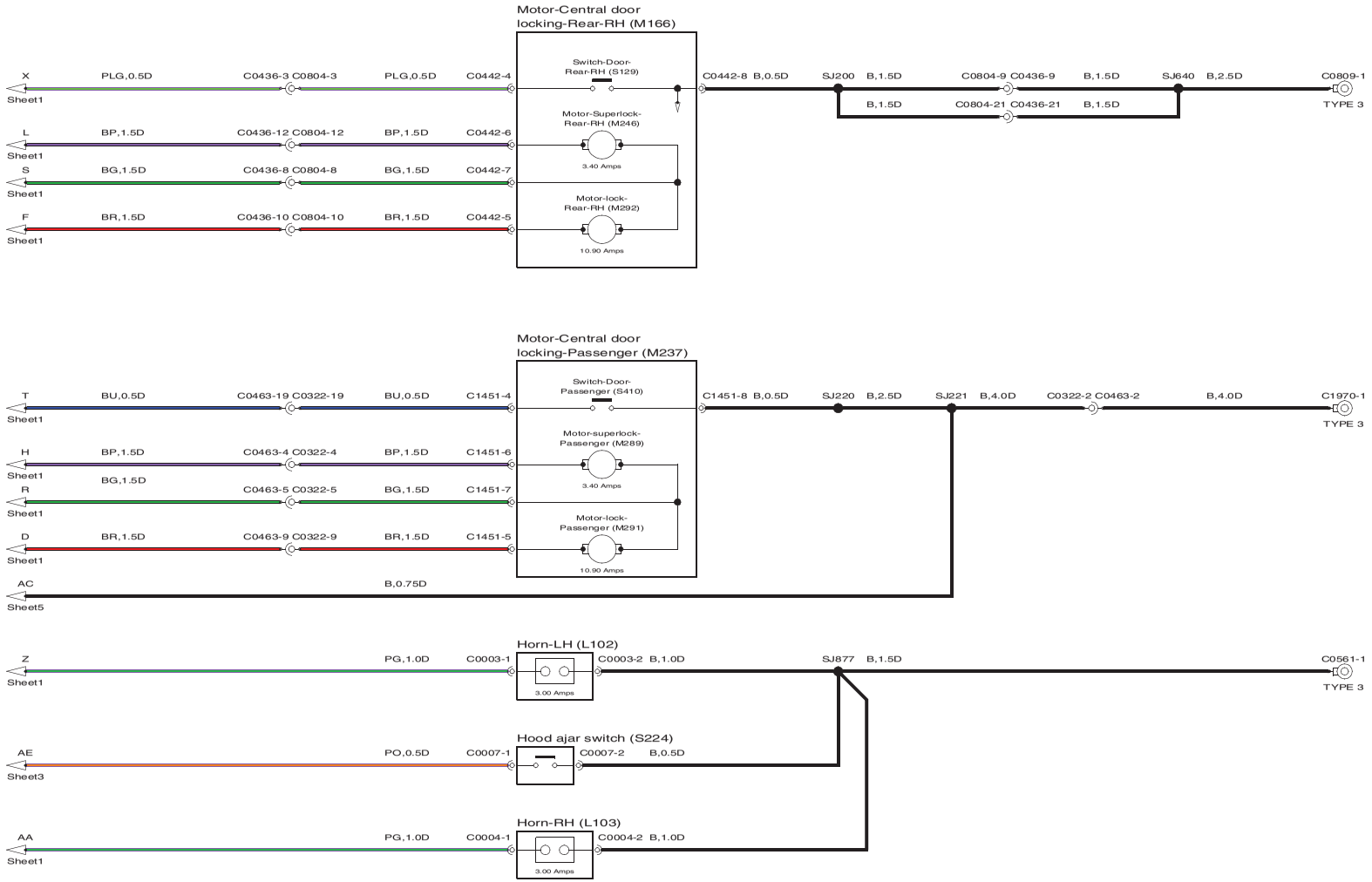
Motor-Central door locking-Rear-RH (M166)
Switch-Door-Rear-RH (S129)
Motor-Superlock-Rear-RH (M246)
3.40 Amps
Motor-lock-Rear-RH (M292)
10.90 Amps
X
PLG,0.5D
C0436-3 C0804-3
PLG,0.5D
C0442-4
Sheet1
L
BP,1.5D
C0436-12 C0804-12
BP,1.5D
C0442-6
Sheet1
S
BG,1.5D
C0436-8 C0804-8
BG,1.5D
C0442-7
Sheet1
F
BR,1.5D
C0436-10 C0804-10
BR,1.5D
C0442-5
Sheet1
C0442-8 B,0.5D
SJ200
B,1.5D
C0804-9 C0436-9
B,1.5D
SJ640
B,2.5D
C0809-1
TYPE 3
B,1.5D
C0804-21 C0436-21
B,1.5D
Motor-Central door locking-Passenger (M237)
Switch-Door-Passenger (S410)
Motor-superlock-Passenger (M289)
3.40 Amps
Motor-lock-Passenger (M291)
10.90 Amps
T
BU,0.5D
C0463-19 C0322-19
BU,0.5D
C1451-4
Sheet1
H
BP,1.5D
C0463-4 C0322-4
BP,1.5D
C1451-6
Sheet1
R
BG,1.5D
C0463-5 C0322-5
BG,1.5D
C1451-7
Sheet1
D
BR,1.5D
C0463-9 C0322-9
BR,1.5D
C1451-5
Sheet1
AC
B,0.75D
Sheet5
C1451-8 B,0.5D
SJ220
B,2.5D
SJ221
B,4.0D
C0322-2 C0463-2
B,4.0D
C1970-1
TYPE 3
Horn-LH (L102)
Z
PG,1.0D
C0003-1
Sheet1
3.00 Amps
C0003-2 B,1.0D
SJ877
B,1.5D
C0561-1
TYPE 3
Hood ajar switch (S224)
AE
PO,0.5D
C0007-1
Sheet3
C0007-2
B,0.5D
Horn-RH (L103)
AA
PG,1.0D
C0004-1
Sheet1
3.00 Amps
C0004-2 B,1.0D

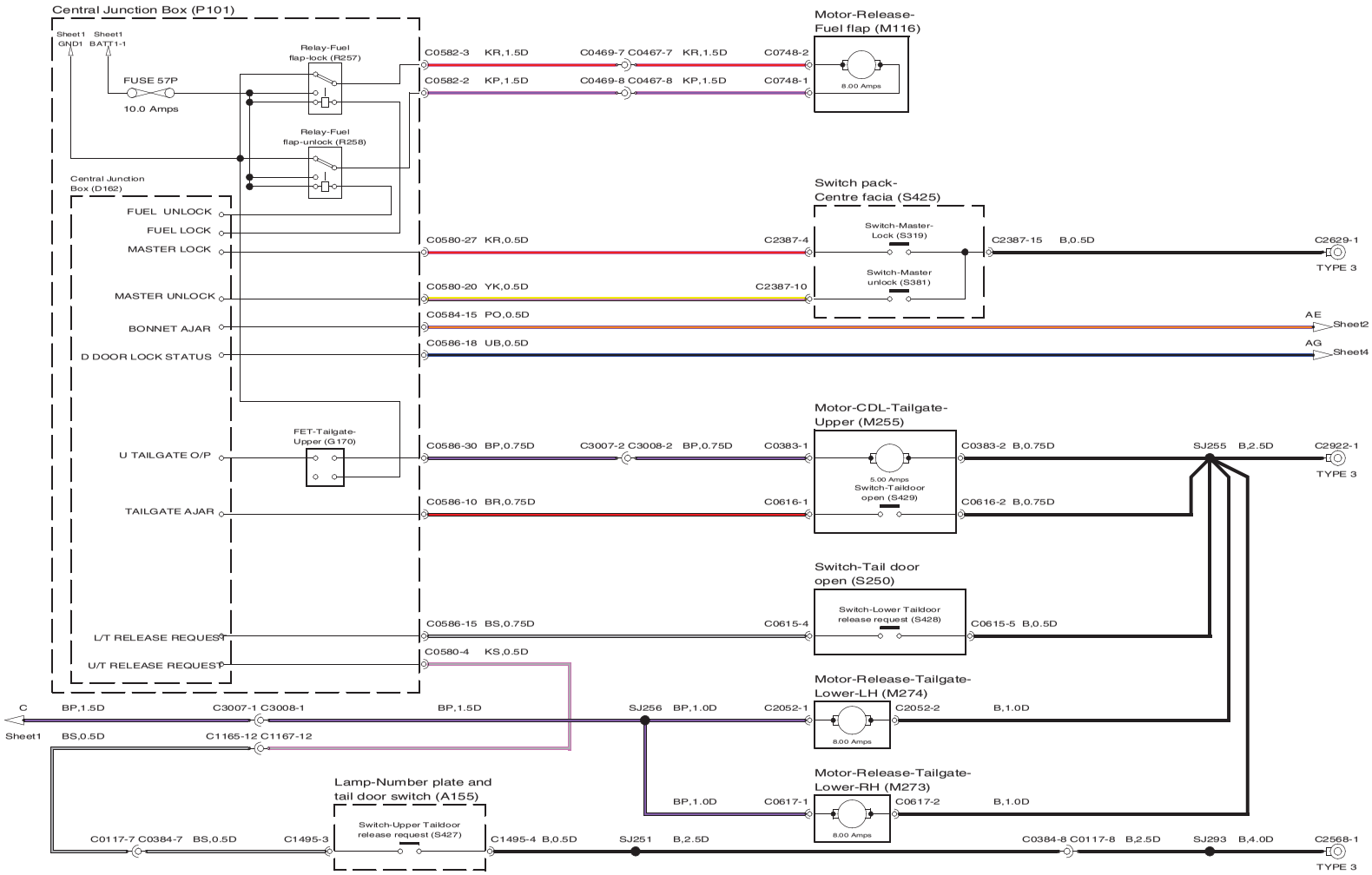
Central Junction Box (P101)
Sheet1 GND1
Sheet1 BATT1-1
FUSE 57P
10.0 Amps
Relay-Fuel flap-lock (R257)
Relay-Fuel flap-unlock (R258)
Central Junction Box (D162)
FUEL UNLOCK
FUEL LOCK
MASTER LOCK
MASTER UNLOCK
BONNET AJAR
D DOOR LOCK STATUS
U TAILGATE O/P
TAILGATE AJAR
L/T RELEASE REQUEST
U/T RELEASE REQUEST
FET-Tailgate-Upper (G170)
C0582-3 KR,1.5D C0469-7 C0467-7 KR,1.5D C0748-2
C0582-2 KP,1.5D C0469-8 C0467-8 KP,1.5D C0748-1
Motor-Release-Fuel flap (M116)
8.00 Amps
Switch pack-Centre facia (S425)
Switch-Master-Lock (S319)
Switch-Master unlock (S381)
C0580-27 KR,0.5D C2387-4
C2387-15 B,0.5D C2629-1
TYPE 3
C0580-20 YK,0.5D C2387-10
C0584-15 PO,0.5D
AE Sheet2
C0586-18 UB,0.5D
AG Sheet4
Motor-CDL-Tailgate-Upper (M255)
5.00 Amps
Switch-Taildoor open (S429)
C0586-30 BP,0.75D C3007-2 C3008-2 BP,0.75D C0383-1
C0383-2 B,0.75D SJ255 B,2.5D C2922-1
TYPE 3
C0586-10 BR,0.75D C0616-1
C0616-2 B,0.75D
Switch-Tail door open (S250)
Switch-Lower Taildoor release request (S428)
C0586-15 BS,0.75D C0615-4
C0615-5 B,0.5D
C0580-4 KS,0.5D
Motor-Release-Tailgate-Lower-LH (M274)
8.00 Amps
C BP,1.5D C3007-1 C3008-1 BP,1.5D SJ256 BP,1.0D C2052-1
C2052-2 B,1.0D
Sheet1 BS,0.5D C1165-12 C1167-12
Motor-Release-Tailgate-Lower-RH (M273)
8.00 Amps
BP,1.0D C0617-1
C0617-2 B,1.0D
Lamp-Number plate and tail door switch (A155)
Switch-Upper Taildoor release request (S427)
C0117-7 C0384-7 BS,0.5D C1495-3
C1495-4 B,0.5D SJ251 B,2.5D
C0384-8 C0117-8 B,2.5D SJ293 B,4.0D C2568-1
TYPE 3

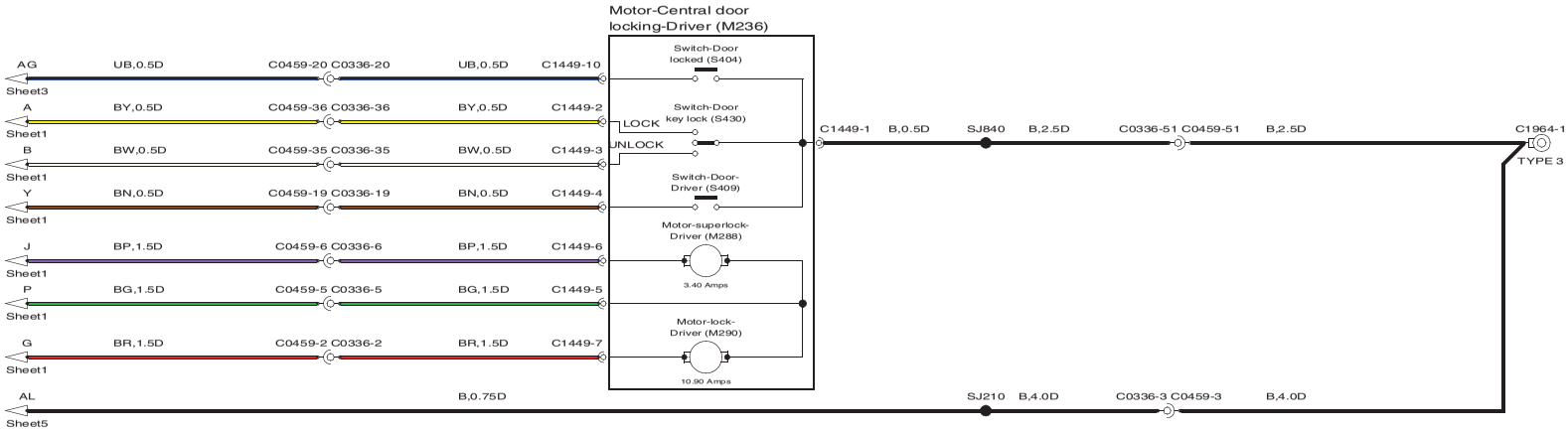
Motor-Central door locking-Driver (M236)
AG
UB,0.5D
C0459-20 C0336-20
UB,0.5D
C1449-10
Sheet3
A
BY,0.5D
C0459-36 C0336-36
BY,0.5D
C1449-2
Sheet1
B
BW,0.5D
C0459-35 C0336-35
BW,0.5D
C1449-3
Sheet1
Y
BN,0.5D
C0459-19 C0336-19
BN,0.5D
C1449-4
Sheet1
J
BP,1.5D
C0459-6 C0336-6
BP,1.5D
C1449-6
Sheet1
P
BG,1.5D
C0459-5 C0336-5
BG,1.5D
C1449-5
Sheet1
G
BR,1.5D
C0459-2 C0336-2
BR,1.5D
C1449-7
Sheet1
AL
B,0.75D
Sheet5
Switch-Door locked (S404)
Switch-Door key lock (S430)
LOCK
UNLOCK
Switch-Door-Driver (S409)
Motor-superlock-Driver (M288)
3.40 Amps
Motor-lock-Driver (M290)
10.90 Amps
C1449-1
B,0.5D
SJ840
B,2.5D
C0336-51 C0459-51
B,2.5D
C1964-1
TYPE 3
SJ210
B,4.0D
C0336-3 C0459-3
B,4.0D

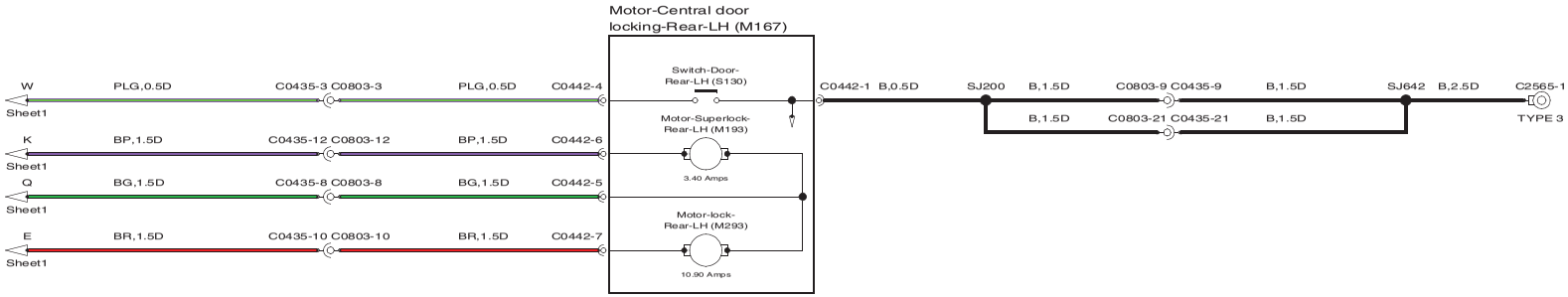
Motor-Central door locking-Rear-LH (M167)
W
PLG,0.5D
C0435-3 C0803-3
PLG,0.5D
C0442-4
Sheet1
K
BP,1.5D
C0435-12 C0803-12
BP,1.5D
C0442-6
Sheet1
Q
BG,1.5D
C0435-8 C0803-8
BG,1.5D
C0442-5
Sheet1
E
BR,1.5D
C0435-10 C0803-10
BR,1.5D
C0442-7
Sheet1
Switch-Door-Rear-LH (S130)
Motor-Superlock-Rear-LH (M193)
3.40 Amps
Motor-lock-Rear-LH (M293)
10.90 Amps
C0442-1
B,0.5D
SJ200
B,1.5D
C0803-9 C0435-9
B,1.5D
SJ642
B,2.5D
C2565-1
TYPE 3
B,1.5D
C0803-21 C0435-21
B,1.5D

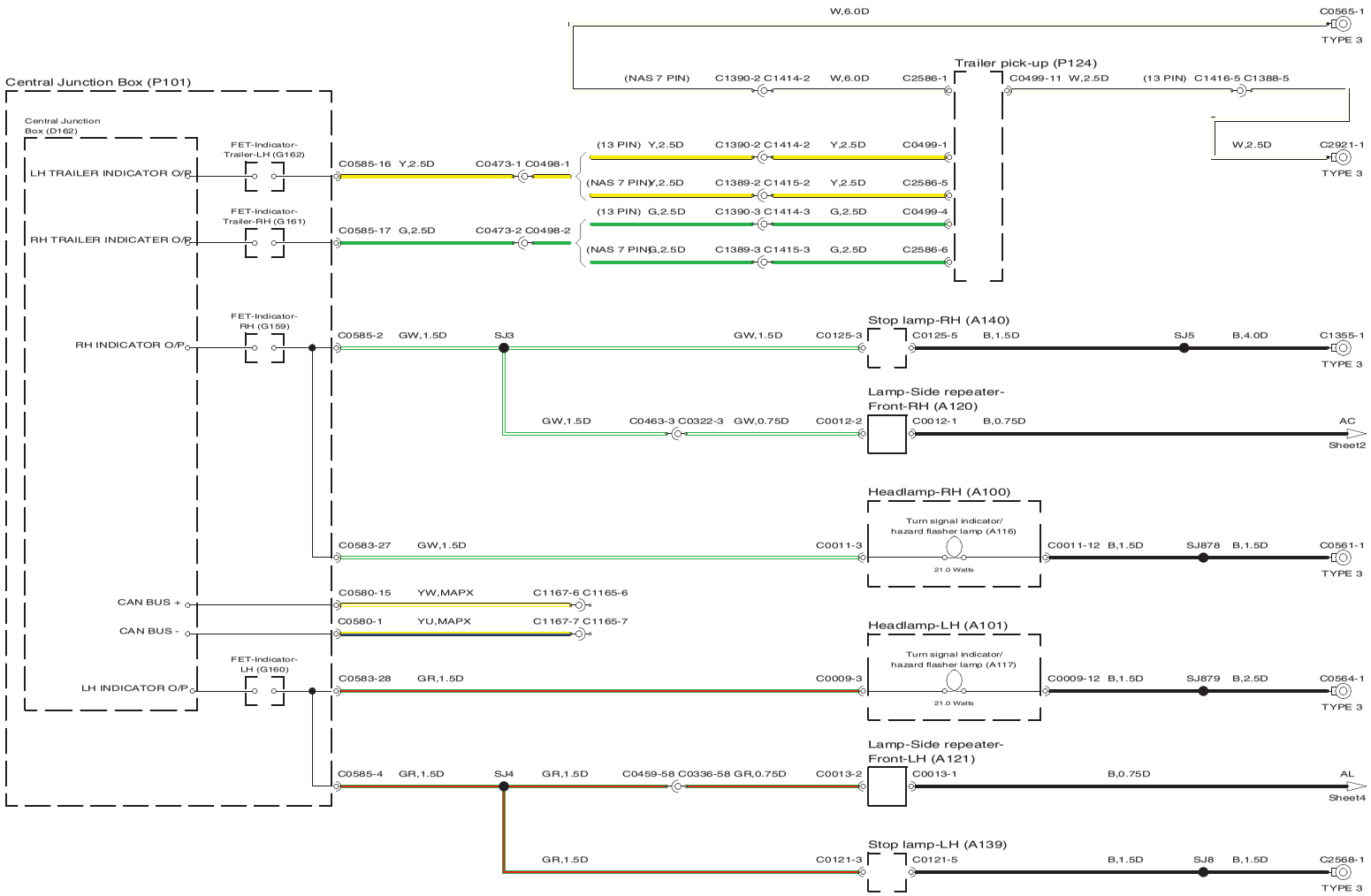
Central Junction Box (P101)
Central Junction Box (D162)
LH TRAILER INDICATOR O/P
RH TRAILER INDICATER O/P
RH INDICATOR O/P
CAN BUS +
CAN BUS -
LH INDICATOR O/P
FET-Indicator-Trailer-LH (G162)
FET-Indicator-Trailer-RH (G161)
FET-Indicator-RH (G159)
FET-Indicator-LH (G160)
C0585-16 Y,2.5D C0473-1 C0498-1
C0585-17 G,2.5D C0473-2 C0498-2
C0585-2 GW,1.5D SJ3 GW,1.5D C0125-3
C0585-27 GW,1.5D C0011-3
C0580-15 YW,MAPX C1167-6 C1165-6
C0580-1 YU,MAPX C1167-7 C1165-7
C0583-28 GR,1.5D C0009-3
C0585-4 GR,1.5D SJ4 GR,1.5D C0459-58 C0336-58 GR,0.75D C0013-2
GR,1.5D C0121-3
W,6.0D
C0565-1
TYPE 3
Trailer pick-up (P124)
(NAS 7 PIN) C1390-2 C1414-2 W,6.0D C2586-1
C0499-11 W,2.5D (13 PIN) C1416-5 C1388-5
W,2.5D C2921-1
TYPE 3
(13 PIN) Y,2.5D C1390-2 C1414-2 Y,2.5D C0499-1
(NAS 7 PIN) Y,2.5D C1389-2 C1415-2 Y,2.5D C2586-5
(13 PIN) G,2.5D C1390-3 C1414-3 G,2.5D C0499-4
(NAS 7 PIN) G,2.5D C1389-3 C1415-3 G,2.5D C2586-6
Stop lamp-RH (A140)
C0125-5 B,1.5D SJ5 B,4.0D C1355-1
TYPE 3
Lamp-Side repeater-Front-RH (A120)
GW,1.5D C0463-3 C0322-3 GW,0.75D C0012-2
C0012-1 B,0.75D AC
Sheet2
Headlamp-RH (A100)
Turn signal indicator/hazard flasher lamp (A116)
21.0 Watts
C0011-12 B,1.5D SJ878 B,1.5D C0561-1
TYPE 3
Headlamp-LH (A101)
Turn signal indicator/hazard flasher lamp (A117)
21.0 Watts
C0009-12 B,1.5D SJ879 B,2.5D C0564-1
TYPE 3
Lamp-Side repeater-Front-LH (A121)
C0013-1 B,0.75D AL
Sheet4
Stop lamp-LH (A139)
C0121-5 B,1.5D SJ8 B,1.5D C2568-1
TYPE 3