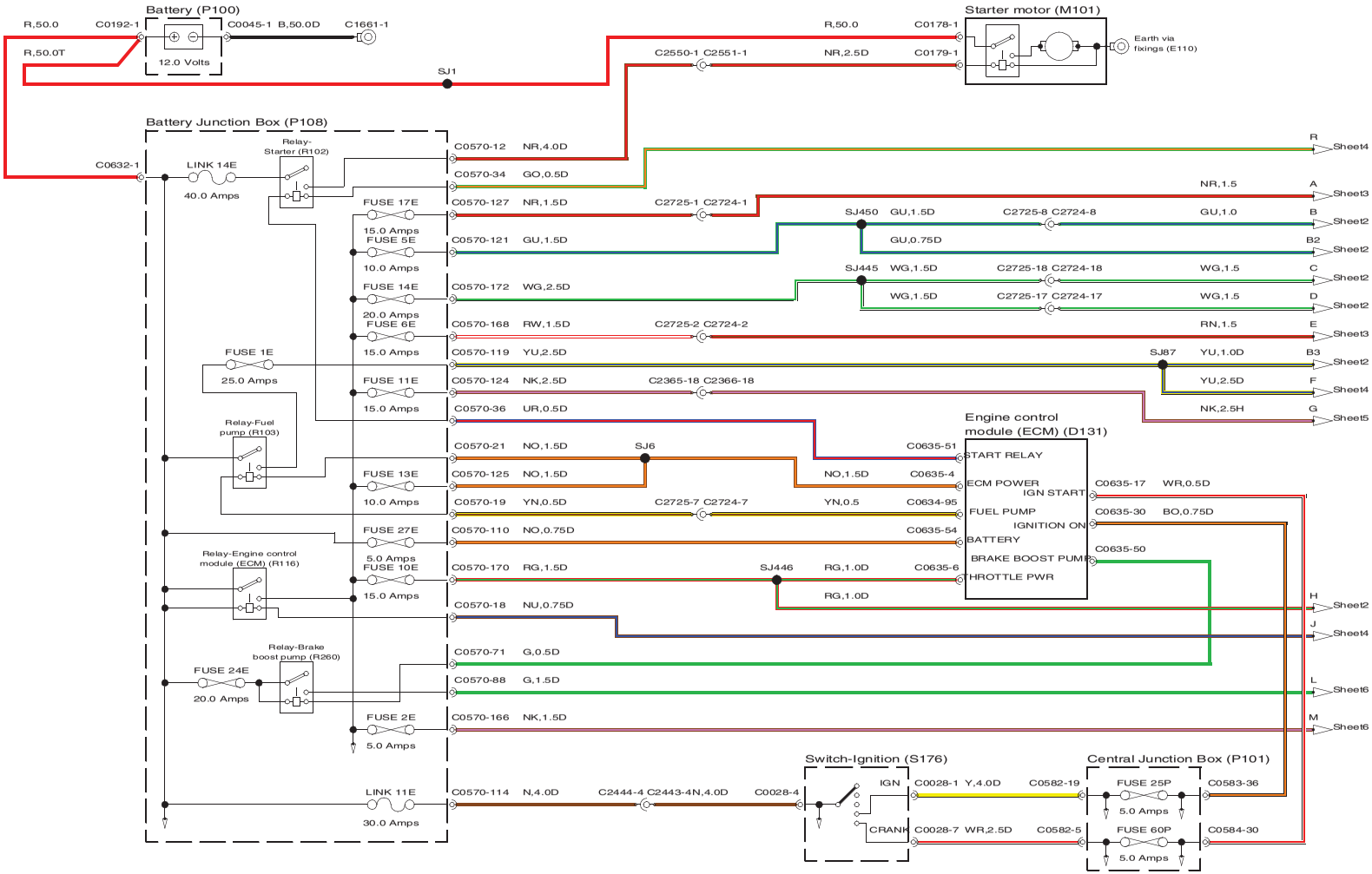
Battery (P100)
12.0 Volts
R,50.0
C0192-1
C0045-1 B,50.0D
C1661-1
R,50.0T
SJ1
Starter motor (M101)
R,50.0
C0178-1
C2550-1 C2551-1
NR,2.5D
C0179-1
Earth via fixings (E110)
Battery Junction Box (P108)
C0632-1
LINK 14E
40.0 Amps
Relay-Starter (R102)
FUSE 17E
15.0 Amps
FUSE 5E
10.0 Amps
FUSE 14E
20.0 Amps
FUSE 6E
15.0 Amps
FUSE 1E
25.0 Amps
FUSE 11E
15.0 Amps
Relay-Fuel pump (R103)
FUSE 13E
10.0 Amps
FUSE 27E
5.0 Amps
Relay-Engine control module (ECM) (R116)
FUSE 10E
15.0 Amps
Relay-Brake boost pump (R260)
FUSE 24E
20.0 Amps
FUSE 2E
5.0 Amps
LINK 11E
30.0 Amps
C0570-12 NR,4.0D
C0570-34 GO,0.5D
C0570-127 NR,1.5D
C2725-1 C2724-1
C0570-121 GU,1.5D
C0570-172 WG,2.5D
C0570-168 RW,1.5D
C2725-2 C2724-2
C0570-119 YU,2.5D
C0570-124 NK,2.5D
C2365-18 C2366-18
C0570-36 UR,0.5D
C0570-21 NO,1.5D
SJ6
C0570-125 NO,1.5D
C0570-19 YN,0.5D
C2725-7 C2724-7
C0570-110 NO,0.75D
C0570-170 RG,1.5D
C0570-18 NU,0.75D
C0570-71 G,0.5D
C0570-88 G,1.5D
C0570-166 NK,1.5D
C0570-114 N,4.0D
C2444-4 C2443-4N,4.0D
C0028-4
SJ450 GU,1.5D
C2725-8 C2724-8
GU,1.0
GU,0.75D
SJ445 WG,1.5D
C2725-18 C2724-18
WG,1.5
WG,1.5D
C2725-17 C2724-17
WG,1.5
RN,1.5
SJ87 YU,1.0D
YU,2.5D
NK,2.5H
NR,1.5
Sheet4
Sheet3
Sheet2
Sheet5
Engine control module (ECM) (D131)
START RELAY
ECM POWER
IGN START
FUEL PUMP
IGNITION ON
BATTERY
BRAKE BOOST PUMP
THROTTLE PWR
C0635-51
C0635-4
NO,1.5D
C0635-17 WR,0.5D
C0634-95
YN,0.5
C0635-30 BO,0.75D
C0635-54
C0635-50
C0635-6
SJ446 RG,1.0D
RG,1.0D
Switch-Ignition (S176)
IGN
CRANK
C0028-1 Y,4.0D
C0582-19
C0028-7 WR,2.5D
C0582-5
Central Junction Box (P101)
FUSE 25P
5.0 Amps
C0583-36
FUSE 60P
5.0 Amps
C0584-30

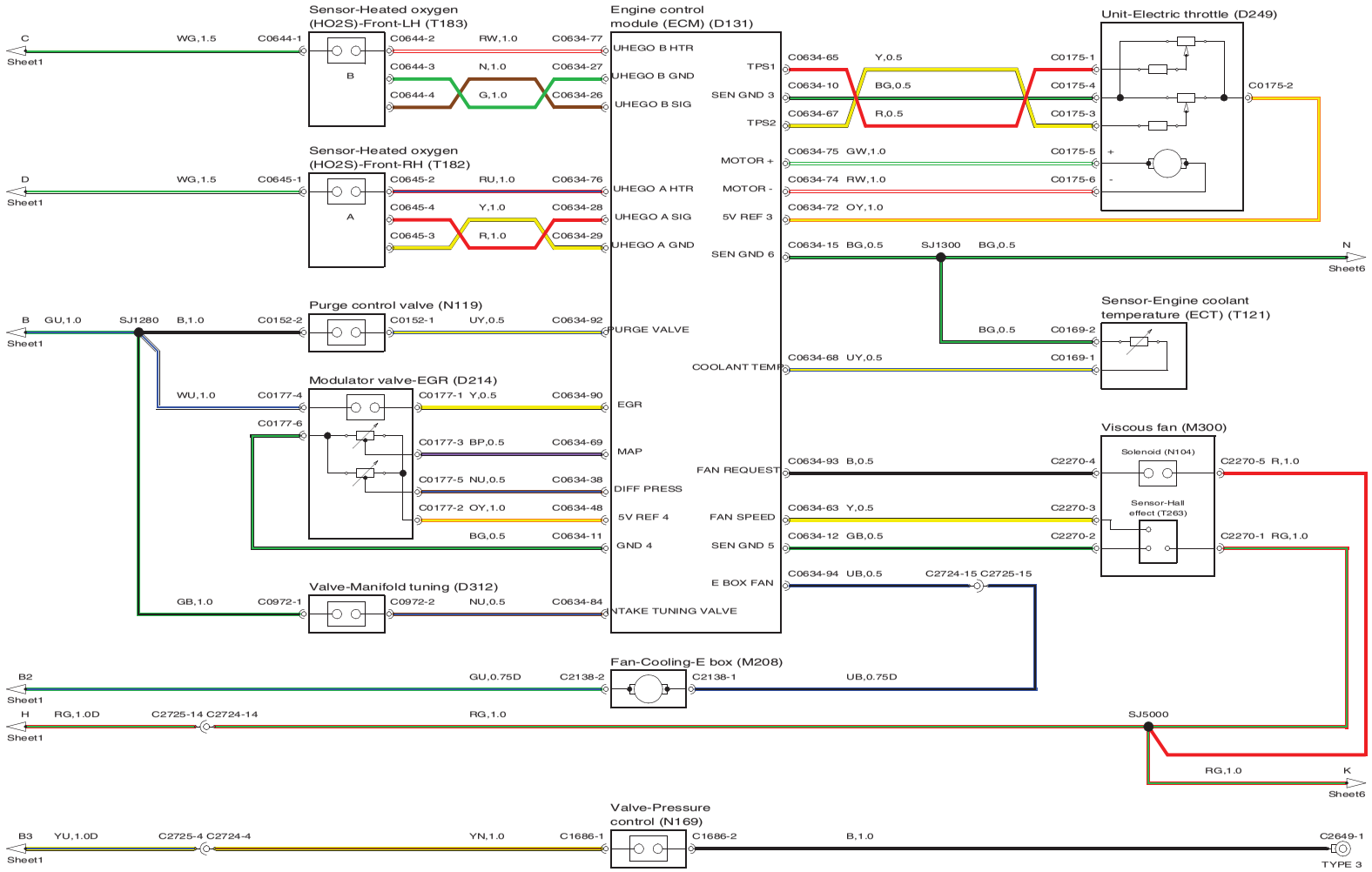
Sensor-Heated oxygen (HO2S)-Front-LH (T183)
Sensor-Heated oxygen (HO2S)-Front-RH (T182)
Purge control valve (N119)
Modulator valve-EGR (D214)
Valve-Manifold tuning (D312)
Engine control module (ECM) (D131)
Unit-Electric throttle (D249)
Sensor-Engine coolant temperature (ECT) (T121)
Viscous fan (M300)
Solenoid (N104)
Sensor-Hall effect (T263)
Fan-Cooling-E box (M208)
Valve-Pressure control (N169)
UHEGO B HTR
UHEGO B GND
UHEGO B SIG
UHEGO A HTR
UHEGO A SIG
UHEGO A GND
PURGE VALVE
EGR
MAP
DIFF PRESS
5V REF 4
GND 4
INTAKE TUNING VALVE
TPS1
SEN GND 3
TPS2
MOTOR +
MOTOR -
5V REF 3
SEN GND 6
COOLANT TEMP
FAN REQUEST
FAN SPEED
SEN GND 5
E BOX FAN
SJ1300
SJ1280
SJ5000
Sheet1
Sheet6
TYPE 3

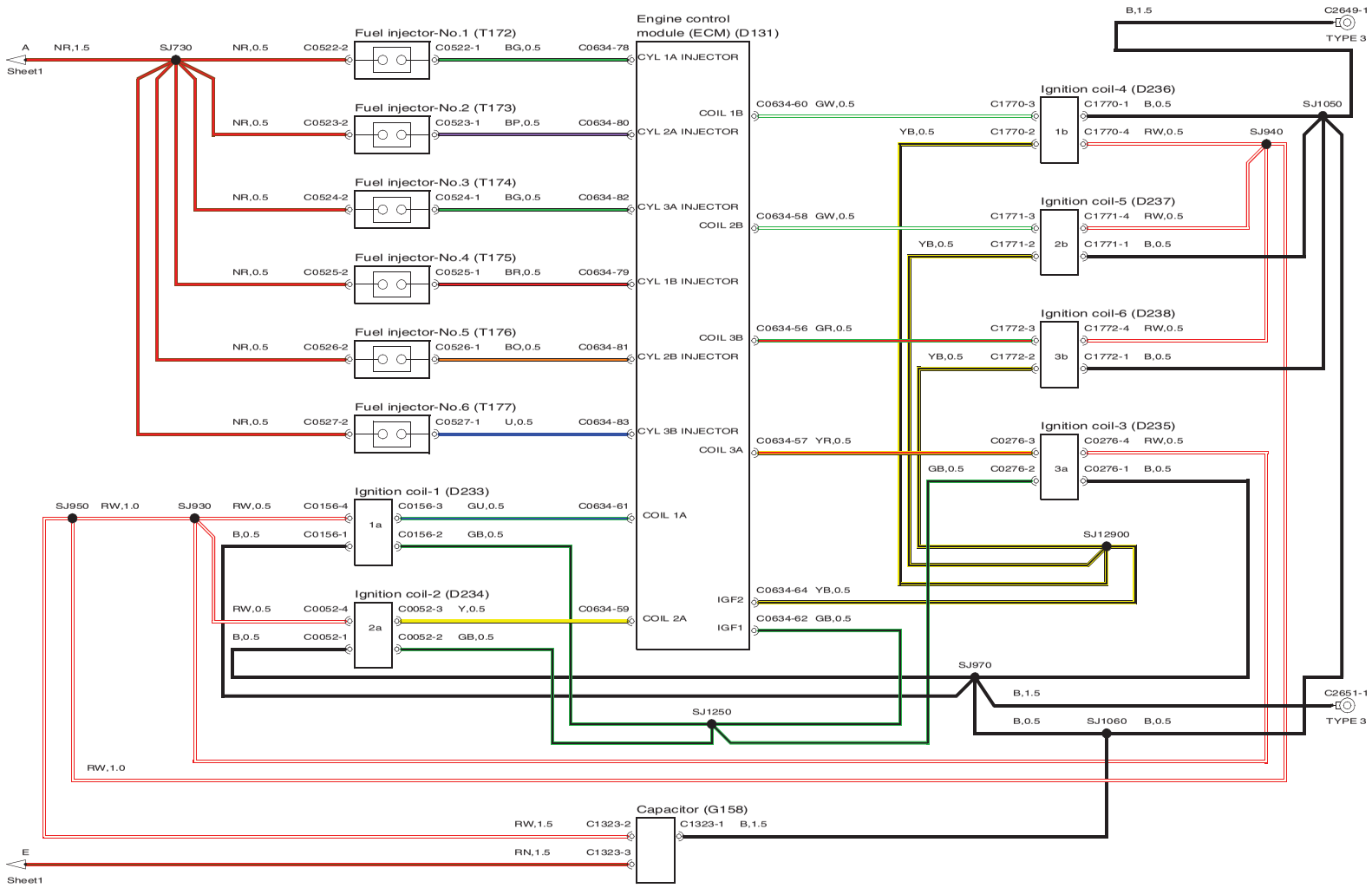
Engine control module (ECM) (D131)
Fuel injector-No.1 (T172)
Fuel injector-No.2 (T173)
Fuel injector-No.3 (T174)
Fuel injector-No.4 (T175)
Fuel injector-No.5 (T176)
Fuel injector-No.6 (T177)
Ignition coil-1 (D233)
Ignition coil-2 (D234)
Ignition coil-3 (D235)
Ignition coil-4 (D236)
Ignition coil-5 (D237)
Ignition coil-6 (D238)
Capacitor (G158)
CYL 1A INJECTOR
COIL 1B
CYL 2A INJECTOR
CYL 3A INJECTOR
COIL 2B
CYL 1B INJECTOR
COIL 3B
CYL 2B INJECTOR
CYL 3B INJECTOR
COIL 3A
COIL 1A
IGF2
COIL 2A
IGF1
SJ730
SJ950
SJ930
SJ970
SJ1250
SJ1060
SJ1050
SJ940
SJ12900
C2649-1
C2651-1
TYPE 3
Sheet1

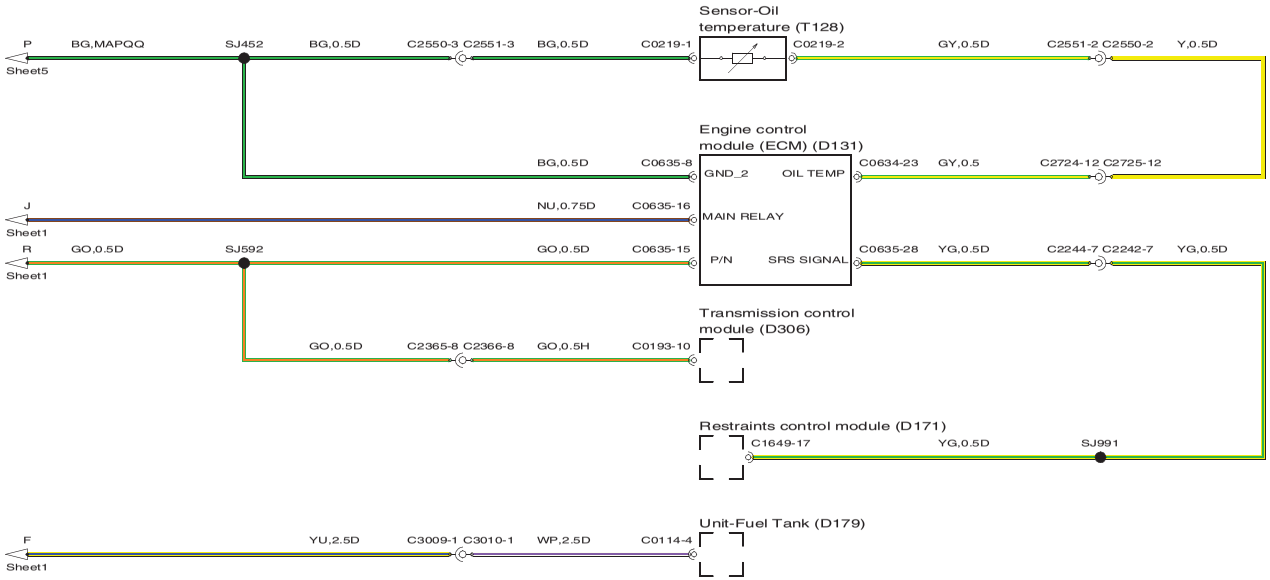
Sensor-Oil temperature (T128)
P
BG,MAPQQ
SJ452
BG,0.5D
C2550-3 C2551-3
BG,0.5D
C0219-1
C0219-2
GY,0.5D
C2551-2 C2550-2
Y,0.5D
Sheet5
Engine control module (ECM) (D131)
BG,0.5D
C0635-8
GND_2
OIL TEMP
C0634-23
GY,0.5
C2724-12 C2725-12
J
NU,0.75D
C0635-16
MAIN RELAY
Sheet1
R
GO,0.5D
SJ592
GO,0.5D
C0635-15
P/N
SRS SIGNAL
C0635-28
YG,0.5D
C2244-7 C2242-7
YG,0.5D
Sheet1
Transmission control module (D306)
GO,0.5D
C2365-8 C2366-8
GO,0.5H
C0193-10
Restraints control module (D171)
C1649-17
YG,0.5D
SJ991
Unit-Fuel Tank (D179)
F
YU,2.5D
C3009-1 C3010-1
WP,2.5D
C0114-4
Sheet1

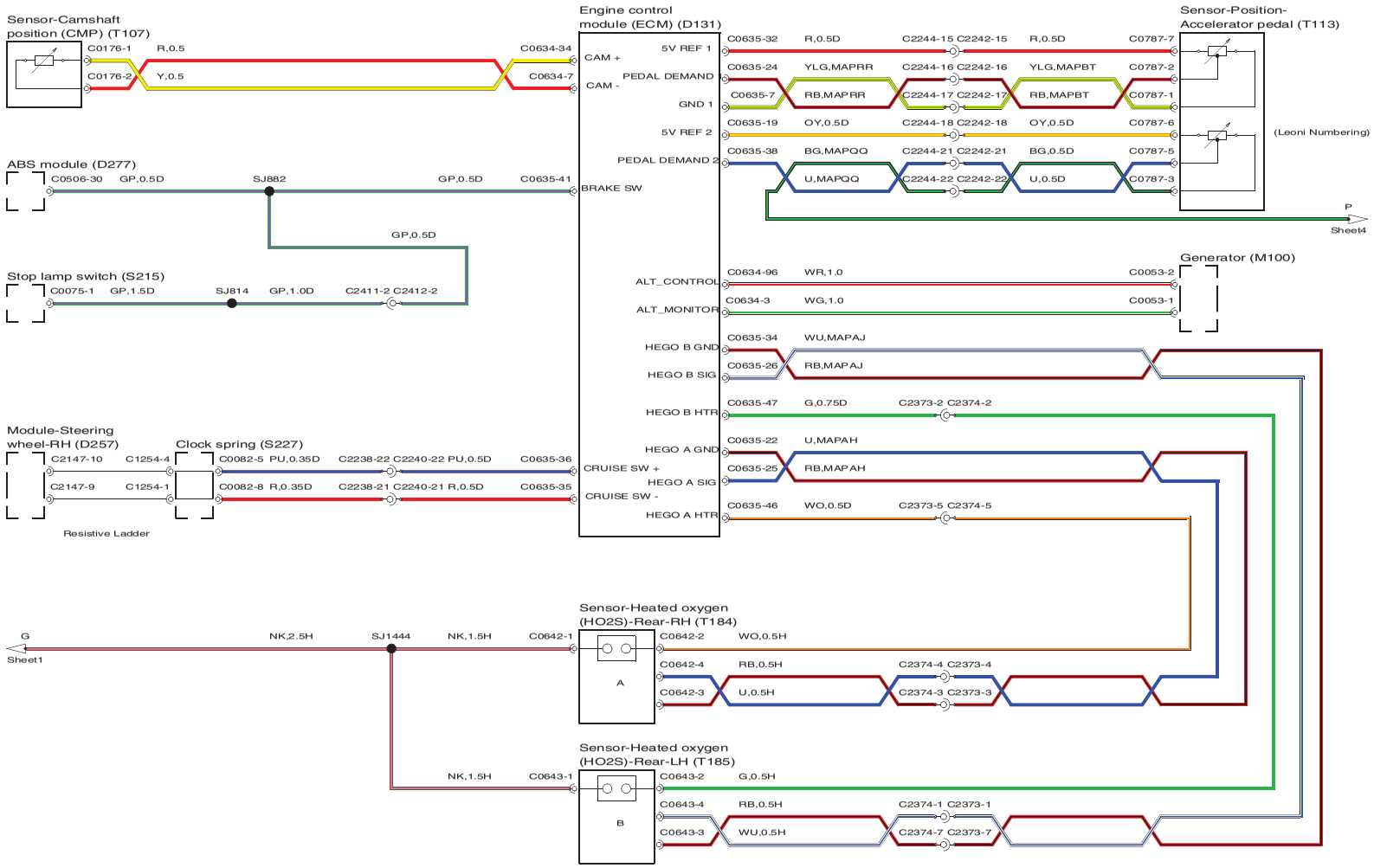
Sensor-Camshaft position (CMP) (T107)
C0176-1 R,0.5 C0634-34
C0176-2 Y,0.5 C0634-7
Engine control module (ECM) (D131)
CAM +
CAM -
5V REF 1
PEDAL DEMAND
GND 1
5V REF 2
PEDAL DEMAND 2
BRAKE SW
C0635-32 R,0.5D C2244-15 C2242-15 R,0.5D C0787-7
C0635-24 YLG,MAPRR C2244-16 C2242-16 YLG,MAPBT C0787-2
C0635-7 RB,MAPRR C2244-17 C2242-17 RB,MAPBT C0787-1
C0635-19 OY,0.5D C2244-18 C2242-18 OY,0.5D C0787-6
C0635-38 BG,MAPQQ C2244-21 C2242-21 BG,0.5D C0787-5
U,MAPQQ C2244-22 C2242-22 U,0.5D C0787-3
Sensor-Position-Accelerator pedal (T113)
(Leoni Numbering)
P
Sheet4
ABS module (D277)
C0506-30 GP,0.5D SJ882 GP,0.5D C0635-41
GP,0.5D
Stop lamp switch (S215)
C0075-1 GP,1.5D SJ814 GP,1.0D C2411-2 C2412-2
Generator (M100)
ALT_CONTROL
ALT_MONITOR
C0634-96 WR,1.0 C0053-2
C0634-3 WG,1.0 C0053-1
HEGO B GND
HEGO B SIG
C0635-34 WU,MAPAJ
C0635-26 RB,MAPAJ
HEGO B HTR
C0635-47 G,0.75D C2373-2 C2374-2
HEGO A GND
HEGO A SIG
HEGO A HTR
C0635-22 U,MAPAH
C0635-25 RB,MAPAH
C0635-46 WO,0.5D C2373-5 C2374-5
Module-Steering wheel-RH (D257)
C2147-10 C1254-4
C2147-9 C1254-1
Resistive Ladder
Clock spring (S227)
C0082-5 PU,0.35D C2238-22 C2240-22 PU,0.5D C0635-36
C0082-8 R,0.35D C2238-21 C2240-21 R,0.5D C0635-35
CRUISE SW +
CRUISE SW -
G
Sheet1
NK,2.5H SJ1444 NK,1.5H C0642-1
Sensor-Heated oxygen (HO2S)-Rear-RH (T184)
A
C0642-2 WO,0.5H
C0642-4 RB,0.5H C2374-4 C2373-4
C0642-3 U,0.5H C2374-3 C2373-3
Sensor-Heated oxygen (HO2S)-Rear-LH (T185)
NK,1.5H C0643-1
B
C0643-2 G,0.5H
C0643-4 RB,0.5H C2374-1 C2373-1
C0643-3 WU,0.5H C2374-7 C2373-7

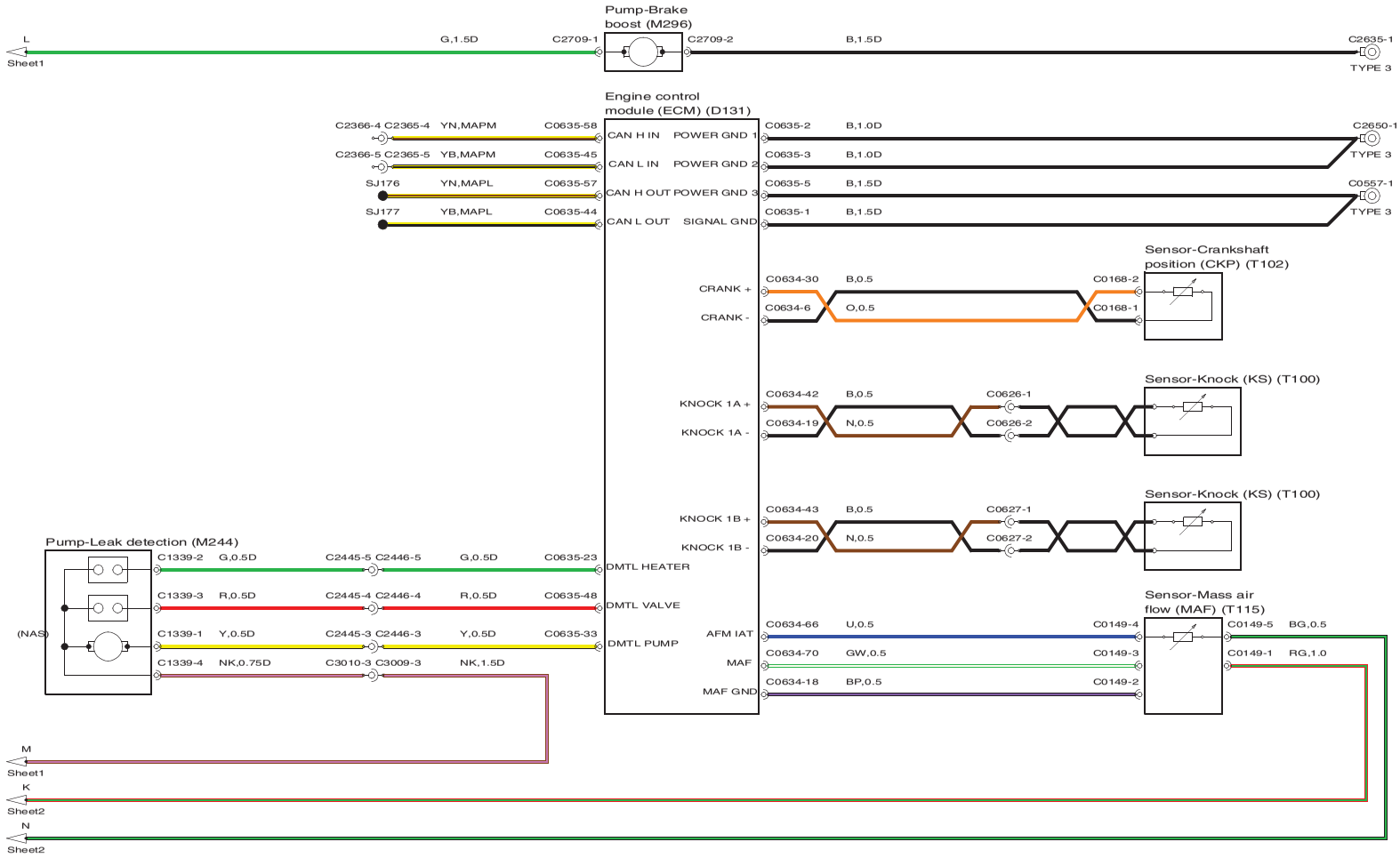
Pump-Brake boost (M296)
L
Sheet1
G,1.5D
C2709-1
C2709-2
B,1.5D
C2635-1
TYPE 3
Engine control module (ECM) (D131)
C2366-4 C2365-4 YN,MAPM C0635-58
CAN H IN
POWER GND 1
C0635-2 B,1.0D
C2650-1
TYPE 3
C2366-5 C2365-5 YB,MAPM C0635-45
CAN L IN
POWER GND 2
C0635-3 B,1.0D
SJ176 YN,MAPL C0635-57
CAN H OUT
POWER GND 3
C0635-5 B,1.5D
C0557-1
TYPE 3
SJ177 YB,MAPL C0635-44
CAN L OUT
SIGNAL GND
C0635-1 B,1.5D
Sensor-Crankshaft position (CKP) (T102)
CRANK +
C0634-30 B,0.5
C0168-2
CRANK -
C0634-6 O,0.5
C0168-1
Sensor-Knock (KS) (T100)
KNOCK 1A +
C0634-42 B,0.5
C0626-1
KNOCK 1A -
C0634-19 N,0.5
C0626-2
Sensor-Knock (KS) (T100)
KNOCK 1B +
C0634-43 B,0.5
C0627-1
KNOCK 1B -
C0634-20 N,0.5
C0627-2
Pump-Leak detection (M244)
(NAS)
C1339-2 G,0.5D C2445-5 C2446-5 G,0.5D C0635-23
DMTL HEATER
C1339-3 R,0.5D C2445-4 C2446-4 R,0.5D C0635-48
DMTL VALVE
C1339-1 Y,0.5D C2445-3 C2446-3 Y,0.5D C0635-33
DMTL PUMP
C1339-4 NK,0.75D C3010-3 C3009-3 NK,1.5D
Sensor-Mass air flow (MAF) (T115)
AFM IAT
C0634-66 U,0.5
C0149-4
C0149-5 BG,0.5
MAF
C0634-70 GW,0.5
C0149-3
C0149-1 RG,1.0
MAF GND
C0634-18 BP,0.5
C0149-2
M
Sheet1
K
Sheet2
N
Sheet2

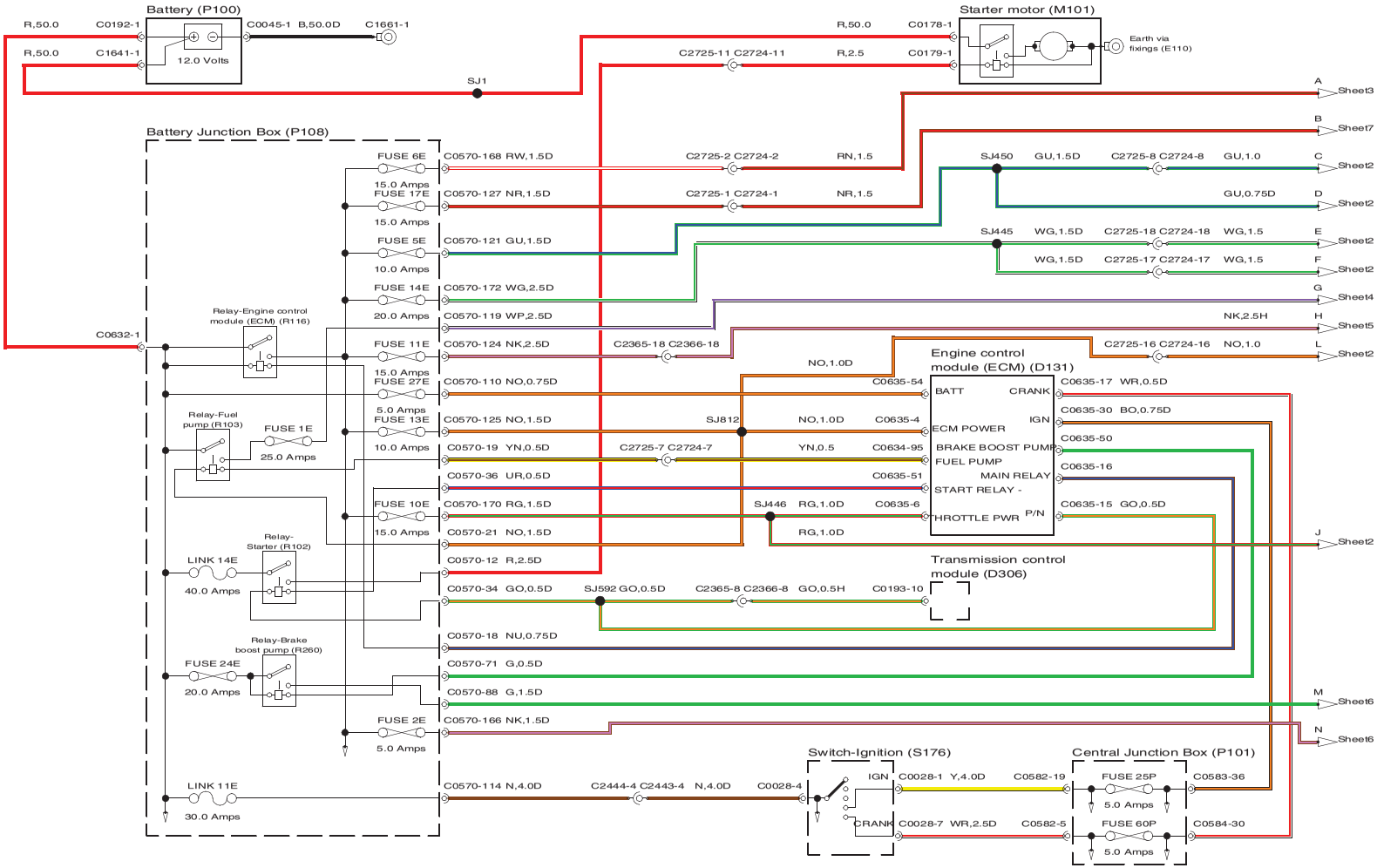
Battery (P100)
R,50.0 C0192-1
R,50.0 C1641-1
12.0 Volts
C0045-1 B,50.0D C1661-1
SJ1
Starter motor (M101)
R,50.0 C0178-1
C2725-11 C2724-11 R,2.5 C0179-1
Earth via fixings (E110)
Battery Junction Box (P108)
FUSE 6E
15.0 Amps
FUSE 17E
15.0 Amps
FUSE 5E
10.0 Amps
FUSE 14E
20.0 Amps
FUSE 11E
15.0 Amps
FUSE 27E
5.0 Amps
FUSE 13E
10.0 Amps
FUSE 10E
15.0 Amps
FUSE 2E
5.0 Amps
C0570-168 RW,1.5D
C0570-127 NR,1.5D
C0570-121 GU,1.5D
C0570-172 WG,2.5D
C0570-119 WP,2.5D
C0570-124 NK,2.5D
C0570-110 NO,0.75D
C0570-125 NO,1.5D
C0570-19 YN,0.5D
C0570-36 UR,0.5D
C0570-170 RG,1.5D
C0570-21 NO,1.5D
C0570-12 R,2.5D
C0570-34 GO,0.5D
C0570-18 NU,0.75D
C0570-71 G,0.5D
C0570-88 G,1.5D
C0570-166 NK,1.5D
C0570-114 N,4.0D
C0632-1
Relay-Engine control module (ECM) (R116)
Relay-Fuel pump (R103)
FUSE 1E
25.0 Amps
Relay-Starter (R102)
LINK 14E
40.0 Amps
Relay-Brake boost pump (R260)
FUSE 24E
20.0 Amps
LINK 11E
30.0 Amps
C2725-2 C2724-2 RN,1.5
C2725-1 C2724-1 NR,1.5
SJ450 GU,1.5D C2725-8 C2724-8 GU,1.0
GU,0.75D
SJ445 WG,1.5D C2725-18 C2724-18 WG,1.5
WG,1.5D C2725-17 C2724-17 WG,1.5
NK,2.5H
C2365-18 C2366-18
C2725-16 C2724-16 NO,1.0
NO,1.0D
SJ812 NO,1.0D C0635-4
C2725-7 C2724-7 YN,0.5 C0634-95
C0635-51
SJ446 RG,1.0D C0635-6
RG,1.0D
SJ592 GO,0.5D C2365-8 C2366-8 GO,0.5H C0193-10
C2444-4 C2443-4 N,4.0D C0028-4
Engine control module (ECM) (D131)
C0635-54
BATT
CRANK
C0635-17 WR,0.5D
C0635-30 BO,0.75D
IGN
ECM POWER
C0635-50
BRAKE BOOST PUMP
FUEL PUMP
C0635-16
MAIN RELAY
START RELAY -
C0635-15 GO,0.5D
THROTTLE PWR
P/N
Transmission control module (D306)
Switch-Ignition (S176)
IGN C0028-1 Y,4.0D C0582-19
CRANK C0028-7 WR,2.5D C0582-5
Central Junction Box (P101)
FUSE 25P
5.0 Amps
C0583-36
FUSE 60P
5.0 Amps
C0584-30
A Sheet3
B Sheet7
C Sheet2
D Sheet2
E Sheet2
F Sheet2
G Sheet4
H Sheet5
L Sheet2
J Sheet2
M Sheet6
N Sheet6

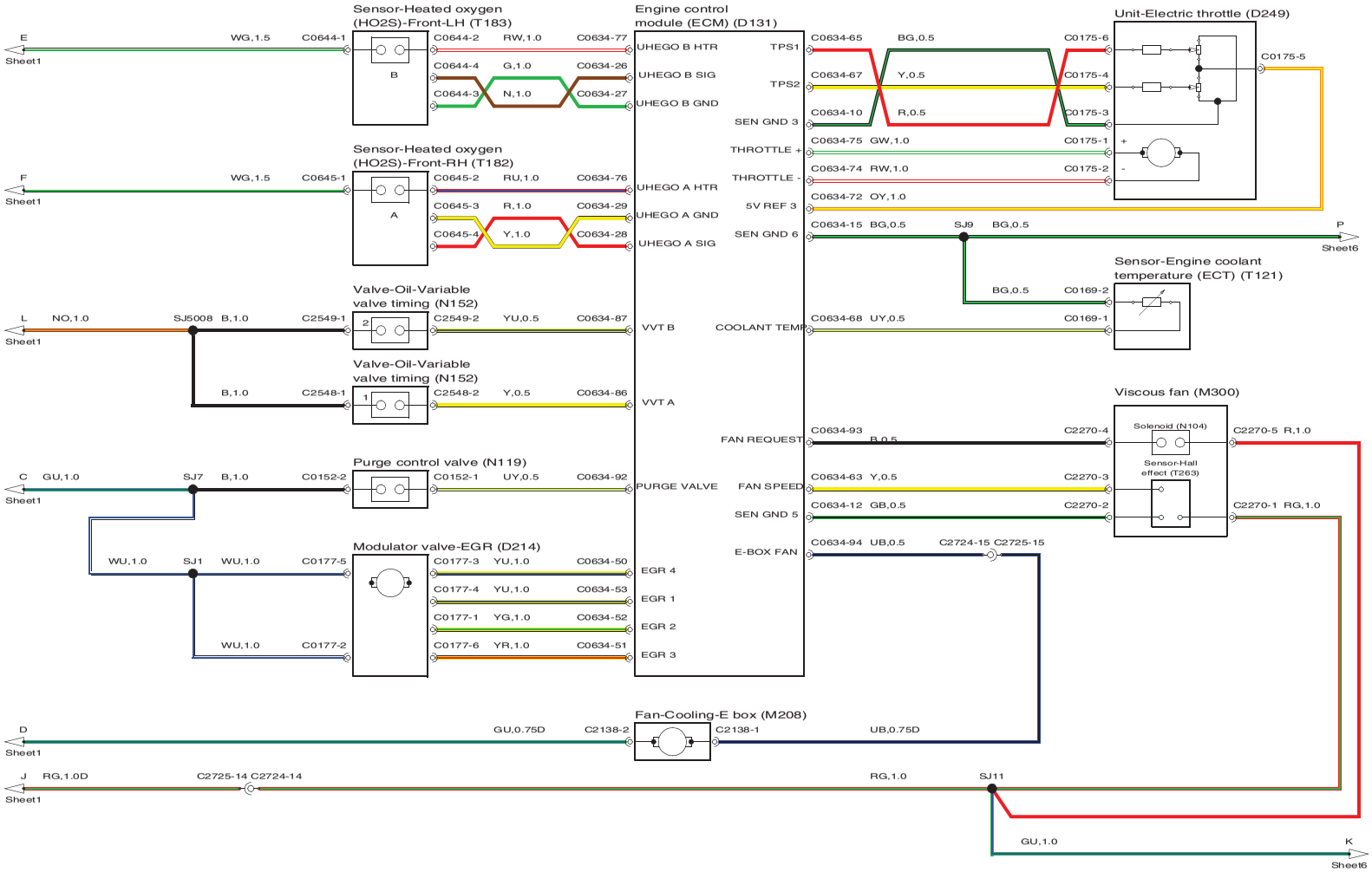
Sensor-Heated oxygen (HO2S)-Front-LH (T183)
Sensor-Heated oxygen (HO2S)-Front-RH (T182)
Valve-Oil-Variable valve timing (N152)
Valve-Oil-Variable valve timing (N152)
Purge control valve (N119)
Modulator valve-EGR (D214)
Engine control module (ECM) (D131)
Unit-Electric throttle (D249)
Sensor-Engine coolant temperature (ECT) (T121)
Viscous fan (M300)
Solenoid (N104)
Sensor-Hall effect (T263)
Fan-Cooling-E box (M208)
UHEGO B HTR
UHEGO B SIG
UHEGO B GND
UHEGO A HTR
UHEGO A GND
UHEGO A SIG
VVT B
VVT A
PURGE VALVE
EGR 4
EGR 1
EGR 2
EGR 3
TPS1
TPS2
SEN GND 3
THROTTLE +
THROTTLE -
5V REF 3
SEN GND 6
COOLANT TEMP
FAN REQUEST
FAN SPEED
SEN GND 5
E-BOX FAN
Sheet1
Sheet6

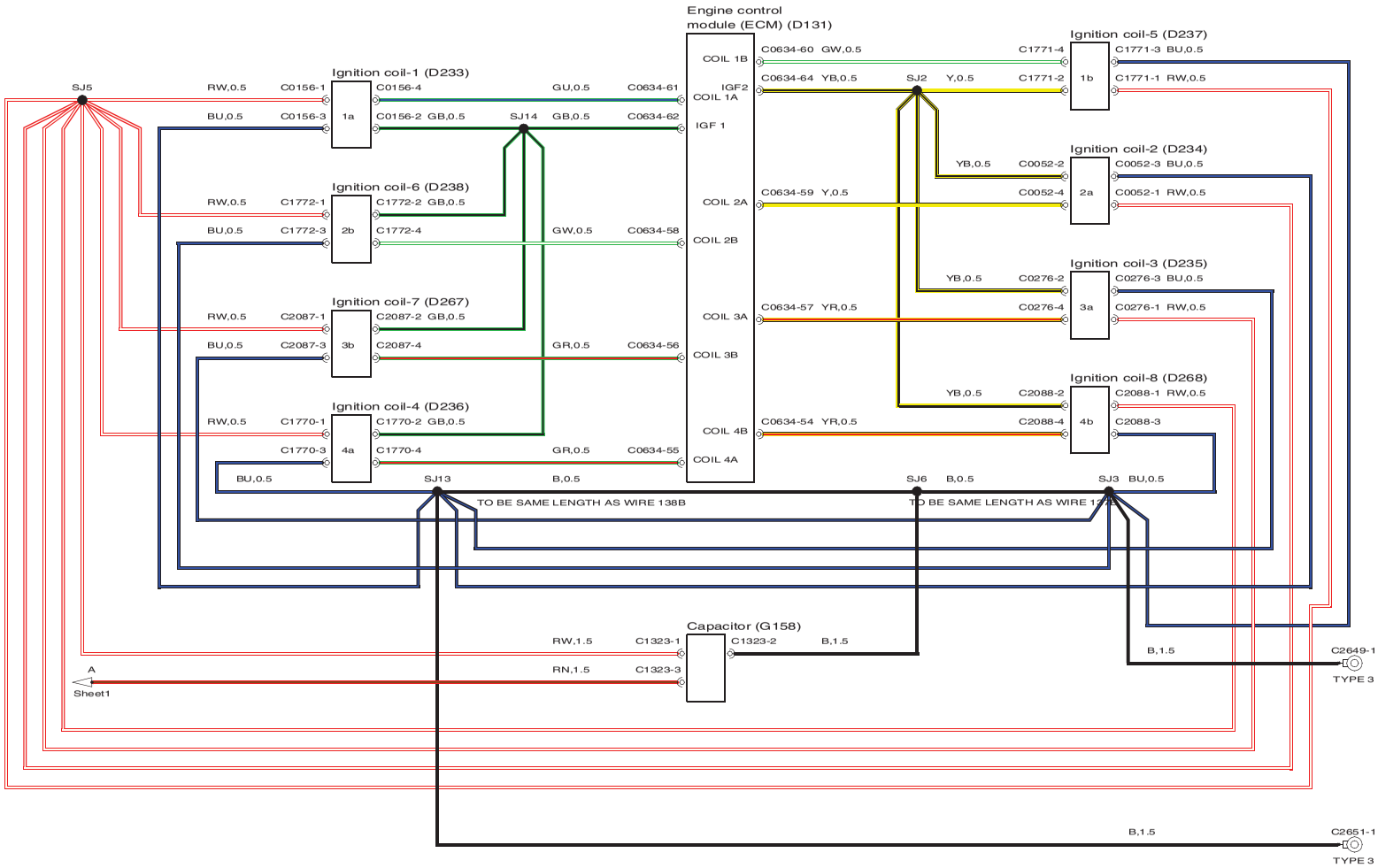
Engine control module (ECM) (D131)
COIL 1B
IGF2
COIL 1A
IGF 1
COIL 2A
COIL 2B
COIL 3A
COIL 3B
COIL 4B
COIL 4A
Ignition coil-1 (D233)
Ignition coil-6 (D238)
Ignition coil-7 (D267)
Ignition coil-4 (D236)
Ignition coil-5 (D237)
Ignition coil-2 (D234)
Ignition coil-3 (D235)
Ignition coil-8 (D268)
SJ5
SJ14
SJ13
SJ2
SJ6
SJ3
C0634-60 GW,0.5
C0634-64 YB,0.5
C0634-59 Y,0.5
C0634-57 YR,0.5
C0634-54 YR,0.5
C0634-61
C0634-62
C0634-58
C0634-56
C0634-55
TO BE SAME LENGTH AS WIRE 138B
Capacitor (G158)
C1323-1
C1323-2
C1323-3
RW,1.5
RN,1.5
B,1.5
A
Sheet1
C2649-1
C2651-1
TYPE 3

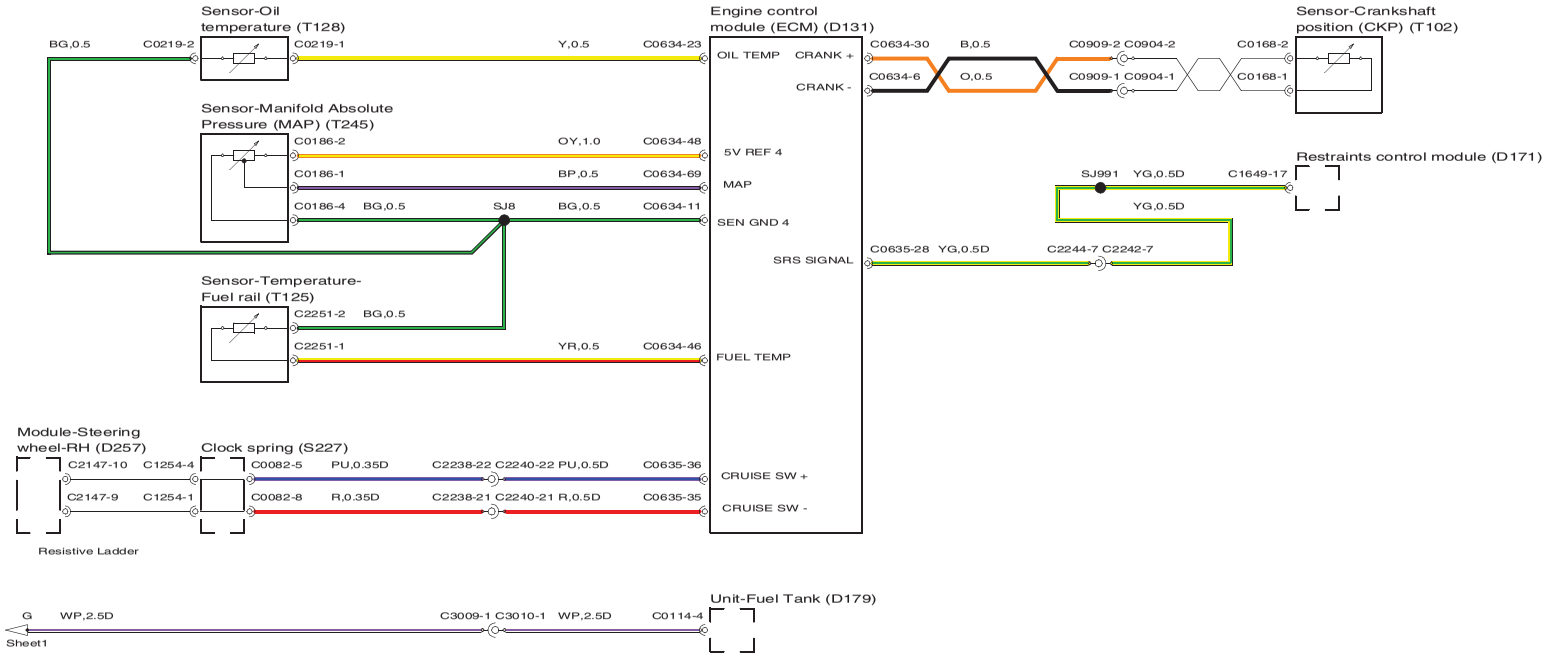
Sensor-Oil temperature (T128)
BG,0.5
C0219-2
C0219-1
Y,0.5
C0634-23
Engine control module (ECM) (D131)
OIL TEMP
CRANK +
CRANK -
C0634-30
B,0.5
C0909-2 C0904-2
C0168-2
C0634-6
O,0.5
C0909-1 C0904-1
C0168-1
Sensor-Crankshaft position (CKP) (T102)
Sensor-Manifold Absolute Pressure (MAP) (T245)
C0186-2
OY,1.0
C0634-48
5V REF 4
C0186-1
BP,0.5
C0634-69
MAP
C0186-4
BG,0.5
SJ8
BG,0.5
C0634-11
SEN GND 4
Restraints control module (D171)
SJ991
YG,0.5D
C1649-17
YG,0.5D
SRS SIGNAL
C0635-28
YG,0.5D
C2244-7 C2242-7
Sensor-Temperature-Fuel rail (T125)
C2251-2
BG,0.5
C2251-1
YR,0.5
C0634-46
FUEL TEMP
Module-Steering wheel-RH (D257)
C2147-10
C1254-4
C2147-9
C1254-1
Resistive Ladder
Clock spring (S227)
C0082-5
PU,0.35D
C2238-22 C2240-22 PU,0.5D
C0635-36
CRUISE SW +
C0082-8
R,0.35D
C2238-21 C2240-21 R,0.5D
C0635-35
CRUISE SW -
Unit-Fuel Tank (D179)
G
WP,2.5D
C3009-1 C3010-1
WP,2.5D
C0114-4
Sheet1

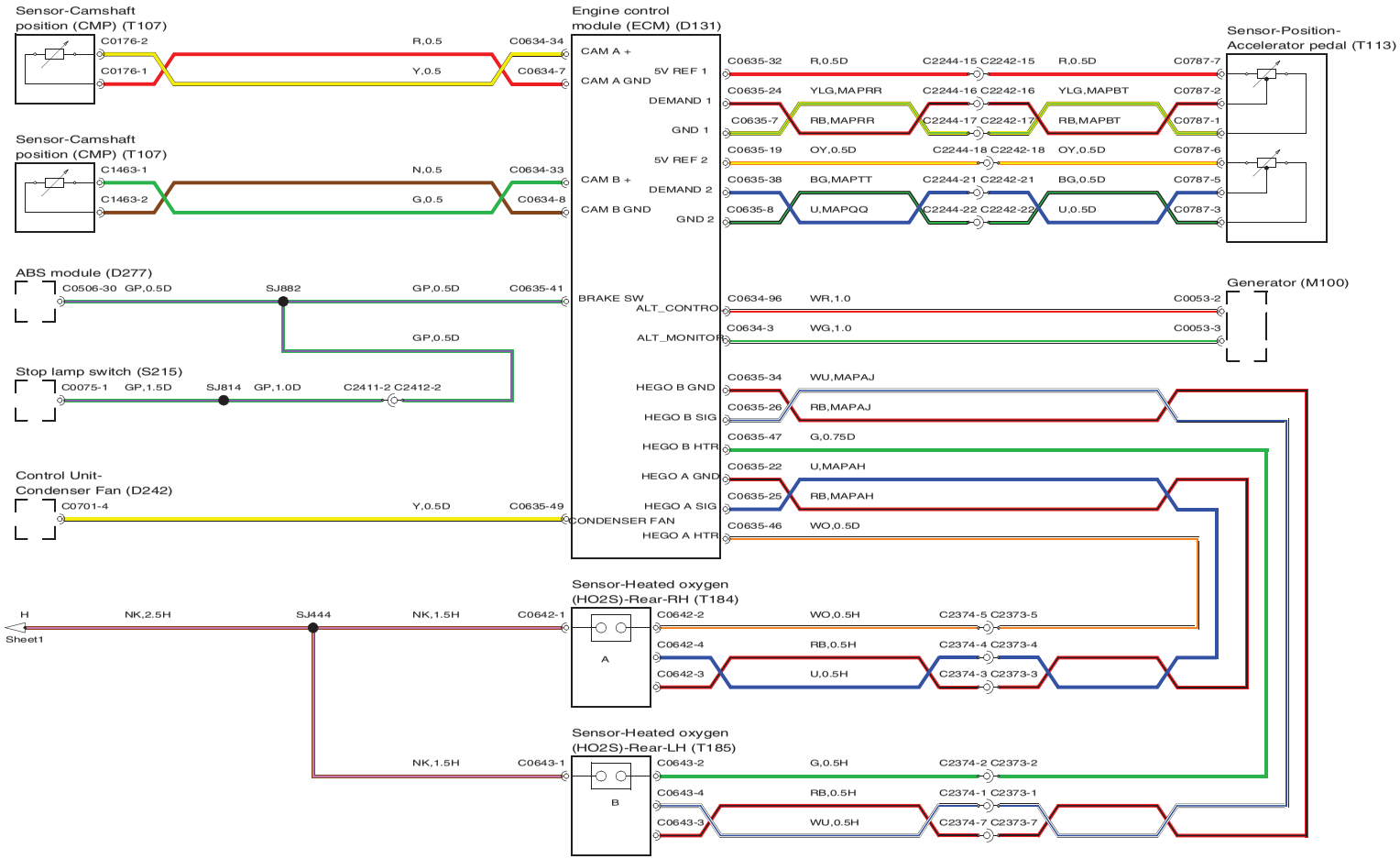
Sensor-Camshaft position (CMP) (T107)
C0176-2
C0176-1
R,0.5
Y,0.5
C0634-34
C0634-7
Sensor-Camshaft position (CMP) (T107)
C1463-1
C1463-2
N,0.5
G,0.5
C0634-33
C0634-8
ABS module (D277)
C0506-30 GP,0.5D
SJ882
GP,0.5D
C0635-41
GP,0.5D
Stop lamp switch (S215)
C0075-1 GP,1.5D
SJ814 GP,1.0D
C2411-2 C2412-2
Control Unit-Condenser Fan (D242)
C0701-4
Y,0.5D
C0635-49
H
Sheet1
NK,2.5H
SJ444
NK,1.5H
C0642-1
NK,1.5H
C0643-1
Engine control module (ECM) (D131)
CAM A +
5V REF 1
CAM A GND
DEMAND 1
GND 1
5V REF 2
CAM B +
DEMAND 2
CAM B GND
GND 2
BRAKE SW
ALT_CONTRO
ALT_MONITOR
HEGO B GND
HEGO B SIG
HEGO B HTR
HEGO A GND
HEGO A SIG
CONDENSER FAN
HEGO A HTR
C0635-32 R,0.5D C2244-15 C2242-15 R,0.5D C0787-7
C0635-24 YLG,MAPRR C2244-16 C2242-16 YLG,MAPBT C0787-2
C0635-7 RB,MAPRR C2244-17 C2242-17 RB,MAPBT C0787-1
C0635-19 OY,0.5D C2244-18 C2242-18 OY,0.5D C0787-6
C0635-38 BG,MAPTT C2244-21 C2242-21 BG,0.5D C0787-5
C0635-8 U,MAPQQ C2244-22 C2242-22 U,0.5D C0787-3
Sensor-Position-Accelerator pedal (T113)
C0634-96 WR,1.0 C0053-2
C0634-3 WG,1.0 C0053-3
Generator (M100)
C0635-34 WU,MAPAJ
C0635-26 RB,MAPAJ
C0635-47 G,0.75D
C0635-22 U,MAPAH
C0635-25 RB,MAPAH
C0635-46 WO,0.5D
Sensor-Heated oxygen (HO2S)-Rear-RH (T184)
A
C0642-2 WO,0.5H C2374-5 C2373-5
C0642-4 RB,0.5H C2374-4 C2373-4
C0642-3 U,0.5H C2374-3 C2373-3
Sensor-Heated oxygen (HO2S)-Rear-LH (T185)
B
C0643-2 G,0.5H C2374-2 C2373-2
C0643-4 RB,0.5H C2374-1 C2373-1
C0643-3 WU,0.5H C2374-7 C2373-7

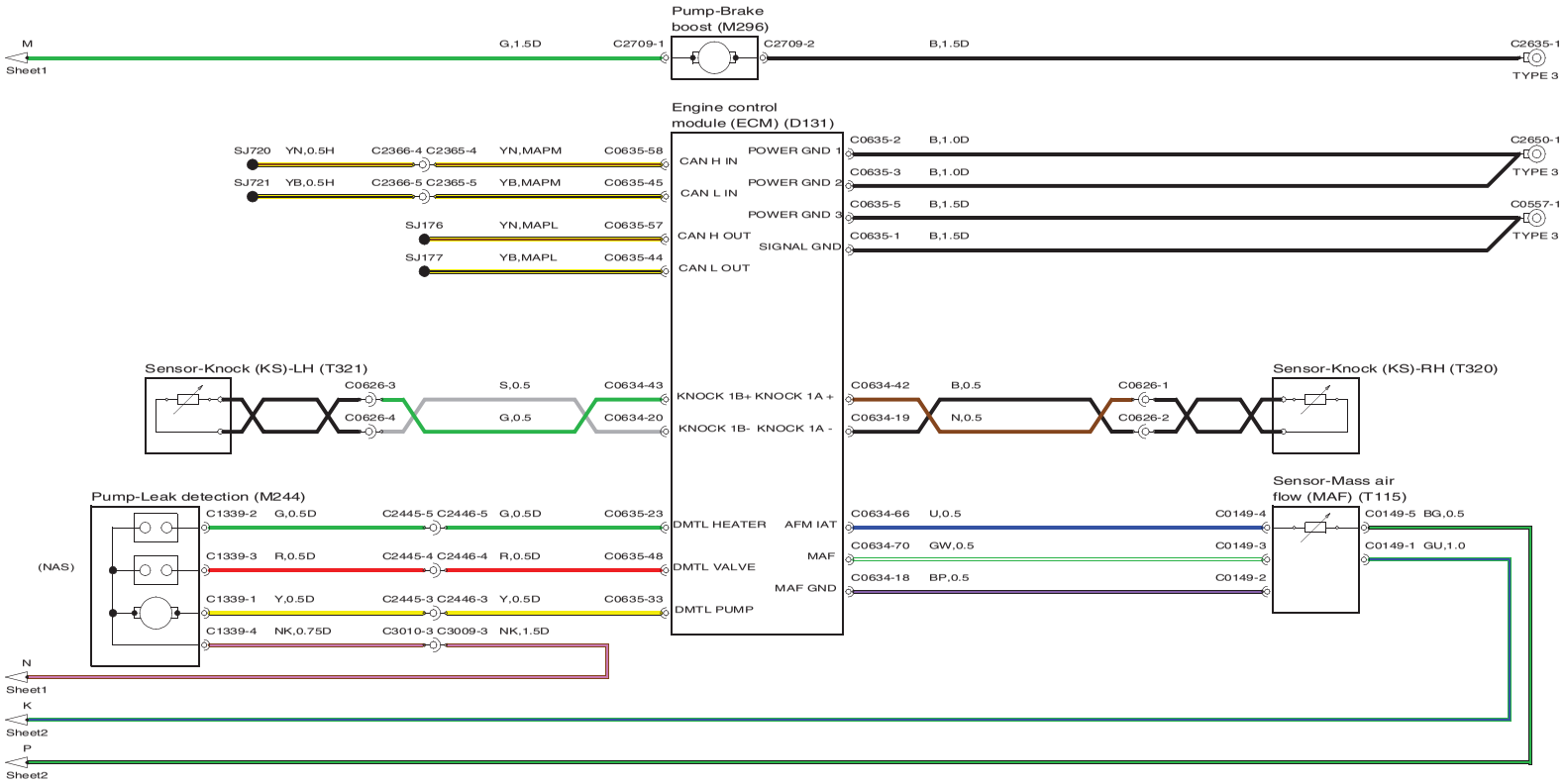
Pump-Brake boost (M296)
M
Sheet1
G,1.5D
C2709-1
C2709-2
B,1.5D
C2635-1
TYPE 3
Engine control module (ECM) (D131)
SJ720 YN,0.5H C2366-4 C2365-4 YN,MAPM C0635-58
SJ721 YB,0.5H C2366-5 C2365-5 YB,MAPM C0635-45
SJ176 YN,MAPL C0635-57
SJ177 YB,MAPL C0635-44
CAN H IN
CAN L IN
CAN H OUT
CAN L OUT
POWER GND 1
POWER GND 2
POWER GND 3
SIGNAL GND
C0635-2 B,1.0D
C0635-3 B,1.0D
C0635-5 B,1.5D
C0635-1 B,1.5D
C2650-1
C0557-1
Sensor-Knock (KS)-LH (T321)
C0626-3 S,0.5 C0634-43
C0626-4 G,0.5 C0634-20
KNOCK 1B+ KNOCK 1A +
KNOCK 1B- KNOCK 1A -
C0634-42 B,0.5 C0626-1
C0634-19 N,0.5 C0626-2
Sensor-Knock (KS)-RH (T320)
Pump-Leak detection (M244)
(NAS)
C1339-2 G,0.5D C2445-5 C2446-5 G,0.5D C0635-23
C1339-3 R,0.5D C2445-4 C2446-4 R,0.5D C0635-48
C1339-1 Y,0.5D C2445-3 C2446-3 Y,0.5D C0635-33
C1339-4 NK,0.75D C3010-3 C3009-3 NK,1.5D
DMTL HEATER
DMTL VALVE
DMTL PUMP
AFM IAT
MAF
MAF GND
C0634-66 U,0.5 C0149-4
C0634-70 GW,0.5 C0149-3
C0634-18 BP,0.5 C0149-2
Sensor-Mass air flow (MAF) (T115)
C0149-5 BG,0.5
C0149-1 GU,1.0
N
Sheet1
K
Sheet2
P
Sheet2

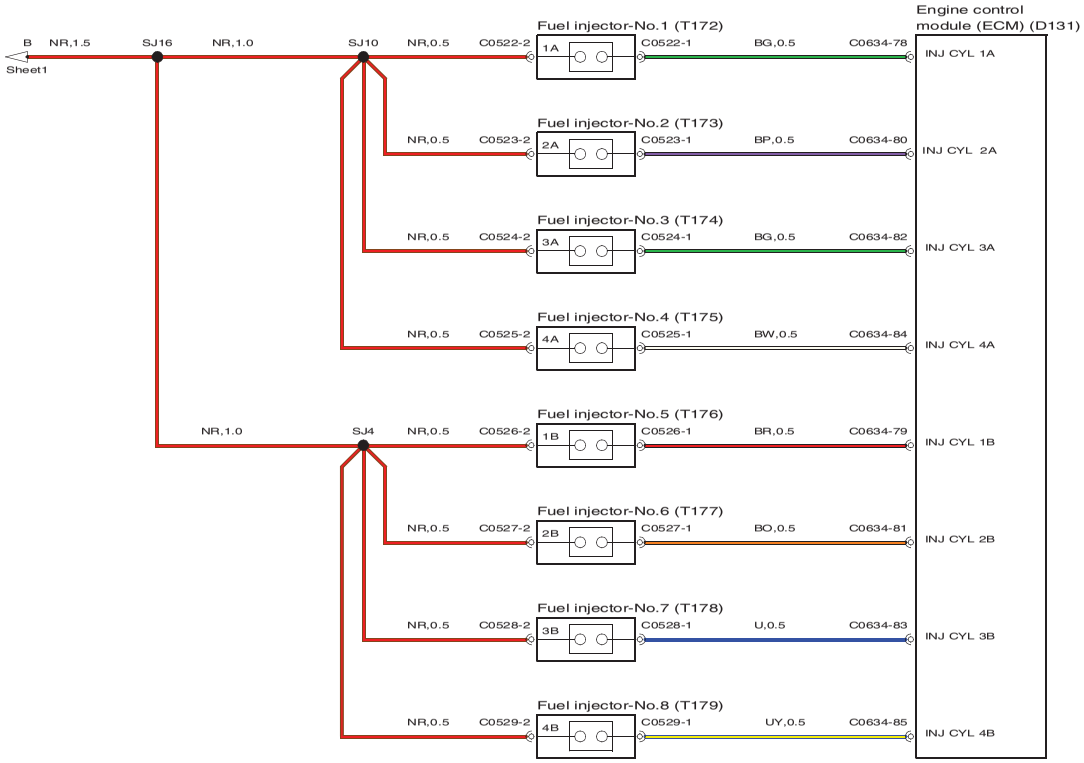
Engine control module (ECM) (D131)
B
NR,1.5
Sheet1
SJ16
NR,1.0
SJ10
NR,0.5
C0522-2
Fuel injector-No.1 (T172)
1A
C0522-1
BG,0.5
C0634-78
INJ CYL 1A
NR,0.5
C0523-2
Fuel injector-No.2 (T173)
2A
C0523-1
BP,0.5
C0634-80
INJ CYL 2A
NR,0.5
C0524-2
Fuel injector-No.3 (T174)
3A
C0524-1
BG,0.5
C0634-82
INJ CYL 3A
NR,0.5
C0525-2
Fuel injector-No.4 (T175)
4A
C0525-1
BW,0.5
C0634-84
INJ CYL 4A
NR,1.0
SJ4
NR,0.5
C0526-2
Fuel injector-No.5 (T176)
1B
C0526-1
BR,0.5
C0634-79
INJ CYL 1B
NR,0.5
C0527-2
Fuel injector-No.6 (T177)
2B
C0527-1
BO,0.5
C0634-81
INJ CYL 2B
NR,0.5
C0528-2
Fuel injector-No.7 (T178)
3B
C0528-1
U,0.5
C0634-83
INJ CYL 3B
NR,0.5
C0529-2
Fuel injector-No.8 (T179)
4B
C0529-1
UY,0.5
C0634-85
INJ CYL 4B

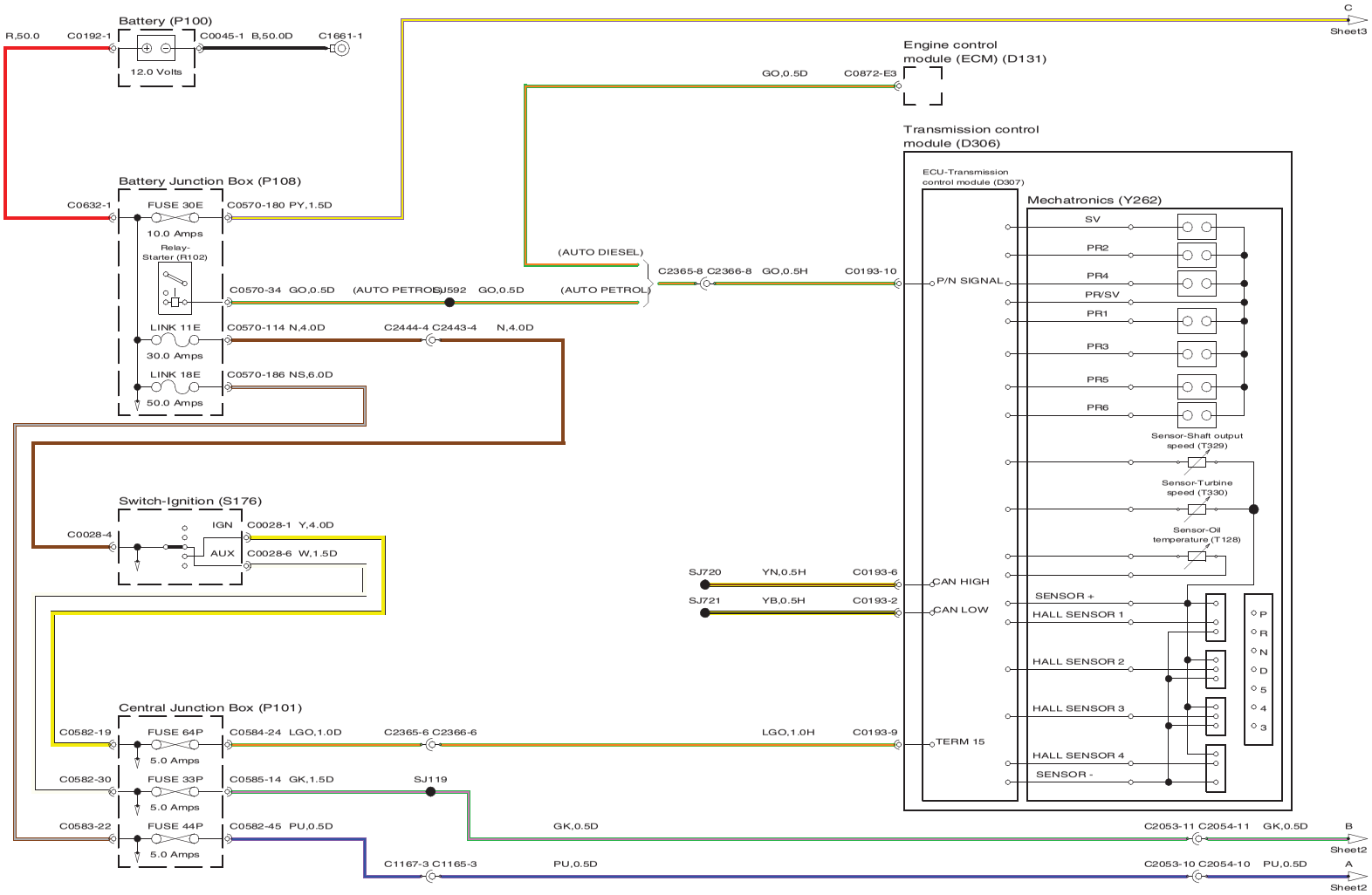
Battery (P100)
R,50.0
C0192-1
C0045-1 B,50.0D
C1661-1
12.0 Volts
C
Sheet3
Engine control module (ECM) (D131)
GO,0.5D
C0872-E3
Transmission control module (D306)
ECU-Transmission control module (D307)
Mechatronics (Y262)
Battery Junction Box (P108)
C0632-1
FUSE 30E
C0570-180 PY,1.5D
10.0 Amps
Relay-Starter (R102)
(AUTO DIESEL)
C2365-8 C2366-8 GO,0.5H
C0193-10
P/N SIGNAL
C0570-34 GO,0.5D
(AUTO PETROL)
SJ592 GO,0.5D
(AUTO PETROL)
LINK 11E
C0570-114 N,4.0D
C2444-4 C2443-4 N,4.0D
30.0 Amps
LINK 18E
C0570-186 NS,6.0D
50.0 Amps
SV
PR2
PR4
PR/SV
PR1
PR3
PR5
PR6
Sensor-Shaft output speed (T329)
Sensor-Turbine speed (T330)
Sensor-Oil temperature (T128)
Switch-Ignition (S176)
C0028-4
IGN
C0028-1 Y,4.0D
AUX
C0028-6 W,1.5D
SJ720
YN,0.5H
C0193-6
CAN HIGH
SJ721
YB,0.5H
C0193-2
CAN LOW
SENSOR +
HALL SENSOR 1
HALL SENSOR 2
HALL SENSOR 3
HALL SENSOR 4
SENSOR -
P
R
N
D
5
4
3
Central Junction Box (P101)
C0582-19
FUSE 64P
C0584-24 LGO,1.0D
C2365-6 C2366-6
LGO,1.0H
C0193-9
TERM 15
5.0 Amps
C0582-30
FUSE 33P
C0585-14 GK,1.5D
SJ119
5.0 Amps
C0583-22
FUSE 44P
C0582-45 PU,0.5D
5.0 Amps
GK,0.5D
C2053-11 C2054-11 GK,0.5D
B
Sheet2
C1167-3 C1165-3
PU,0.5D
C2053-10 C2054-10 PU,0.5D
A
Sheet2

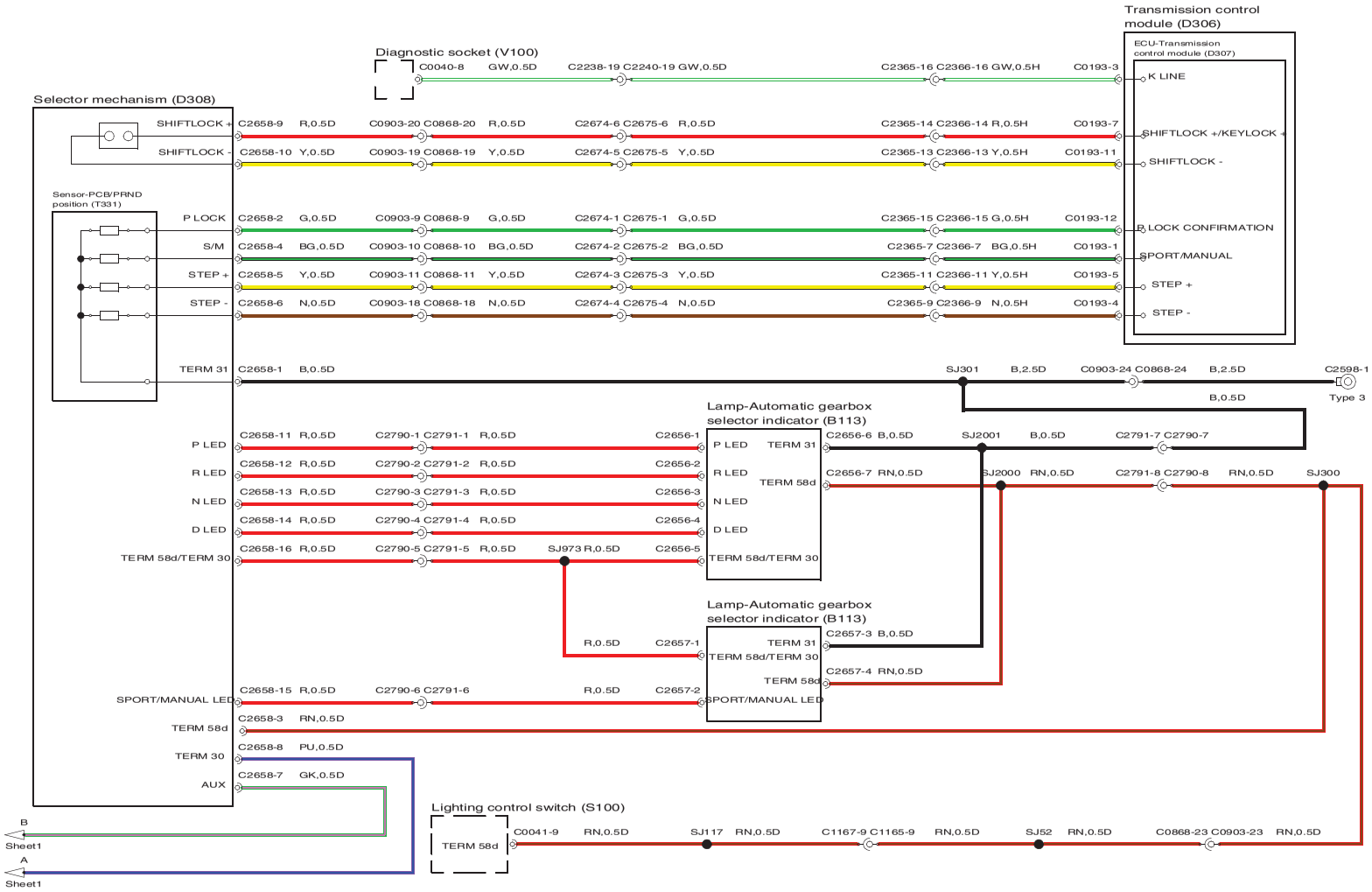
Transmission control module (D306)
ECU-Transmission control module (D307)
Diagnostic socket (V100)
C0040-8 GW,0.5D C2238-19 C2240-19 GW,0.5D C2365-16 C2366-16 GW,0.5H C0193-3
K LINE
Selector mechanism (D308)
SHIFTLOCK +
C2658-9 R,0.5D C0903-20 C0868-20 R,0.5D C2674-6 C2675-6 R,0.5D C2365-14 C2366-14 R,0.5H C0193-7
SHIFTLOCK +/KEYLOCK +
SHIFTLOCK -
C2658-10 Y,0.5D C0903-19 C0868-19 Y,0.5D C2674-5 C2675-5 Y,0.5D C2365-13 C2366-13 Y,0.5H C0193-11
SHIFTLOCK -
Sensor-PCB/PRND position (T331)
P LOCK
C2658-2 G,0.5D C0903-9 C0868-9 G,0.5D C2674-1 C2675-1 G,0.5D C2365-15 C2366-15 G,0.5H C0193-12
P LOCK CONFIRMATION
S/M
C2658-4 BG,0.5D C0903-10 C0868-10 BG,0.5D C2674-2 C2675-2 BG,0.5D C2365-7 C2366-7 BG,0.5H C0193-1
SPORT/MANUAL
STEP +
C2658-5 Y,0.5D C0903-11 C0868-11 Y,0.5D C2674-3 C2675-3 Y,0.5D C2365-11 C2366-11 Y,0.5H C0193-5
STEP +
STEP -
C2658-6 N,0.5D C0903-18 C0868-18 N,0.5D C2674-4 C2675-4 N,0.5D C2365-9 C2366-9 N,0.5H C0193-4
STEP -
TERM 31
C2658-1 B,0.5D
SJ301 B,2.5D C0903-24 C0868-24 B,2.5D C2598-1
B,0.5D
Type 3
Lamp-Automatic gearbox selector indicator (B113)
P LED
C2658-11 R,0.5D C2790-1 C2791-1 R,0.5D C2656-1
P LED
TERM 31
C2656-6 B,0.5D
SJ2001 B,0.5D C2791-7 C2790-7
R LED
C2658-12 R,0.5D C2790-2 C2791-2 R,0.5D C2656-2
R LED
TERM 58d
C2656-7 RN,0.5D
SJ2000 RN,0.5D C2791-8 C2790-8 RN,0.5D SJ300
N LED
C2658-13 R,0.5D C2790-3 C2791-3 R,0.5D C2656-3
N LED
D LED
C2658-14 R,0.5D C2790-4 C2791-4 R,0.5D C2656-4
D LED
TERM 58d/TERM 30
C2658-16 R,0.5D C2790-5 C2791-5 R,0.5D SJ973 R,0.5D C2656-5
TERM 58d/TERM 30
Lamp-Automatic gearbox selector indicator (B113)
R,0.5D C2657-1
TERM 31
C2657-3 B,0.5D
TERM 58d/TERM 30
TERM 58d
C2657-4 RN,0.5D
SPORT/MANUAL LED
C2658-15 R,0.5D C2790-6 C2791-6 R,0.5D C2657-2
SPORT/MANUAL LED
TERM 58d
C2658-3 RN,0.5D
TERM 30
C2658-8 PU,0.5D
AUX
C2658-7 GK,0.5D
B
Sheet1
A
Sheet1
Lighting control switch (S100)
TERM 58d
C0041-9 RN,0.5D SJ117 RN,0.5D C1167-9 C1165-9 RN,0.5D SJ52 RN,0.5D C0868-23 C0903-23 RN,0.5D

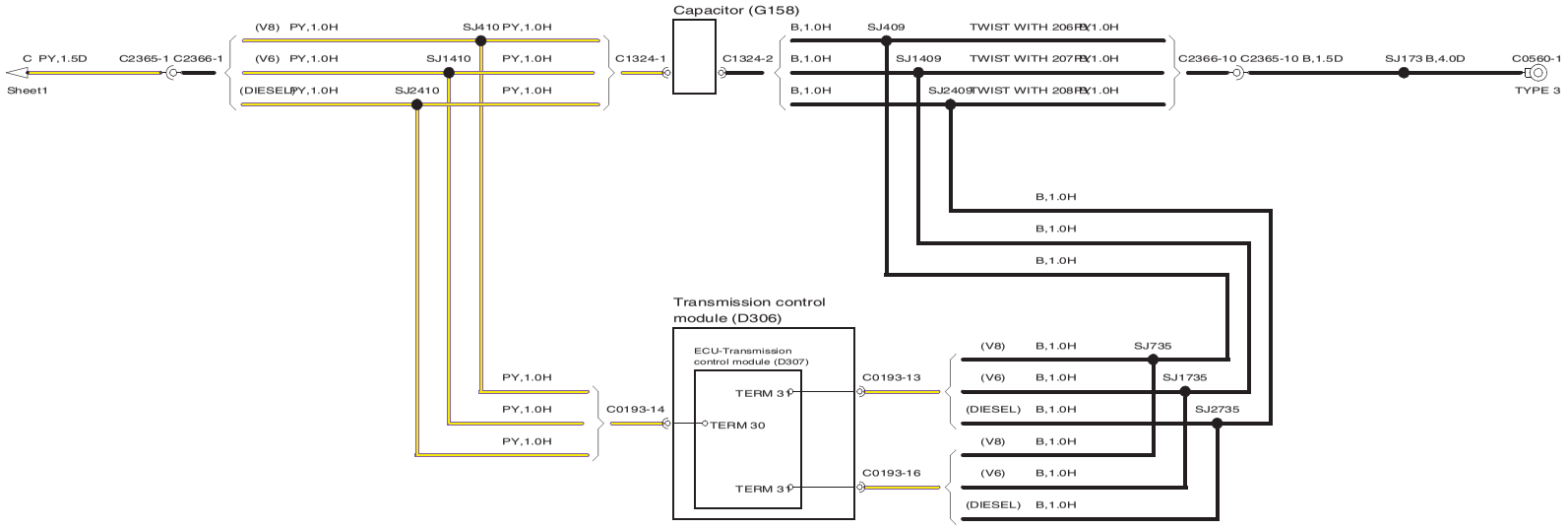
Capacitor (G158)
C PY,1.5D
Sheet1
C2365-1 C2366-1
(V8) PY,1.0H
(V6) PY,1.0H
(DIESEL) PY,1.0H
SJ410 PY,1.0H
SJ1410
PY,1.0H
SJ2410
PY,1.0H
C1324-1
C1324-2
B,1.0H
SJ409
TWIST WITH 206RX 1.0H
SJ1409
TWIST WITH 207RX 1.0H
SJ2409
TWIST WITH 208RX 1.0H
C2366-10 C2365-10 B,1.5D
SJ173 B,4.0D
C0560-1
TYPE 3
Transmission control module (D306)
ECU-Transmission control module (D307)
TERM 31
TERM 30
TERM 31
C0193-14
C0193-13
C0193-16
(V8) B,1.0H SJ735
(V6) B,1.0H SJ1735
(DIESEL) B,1.0H SJ2735

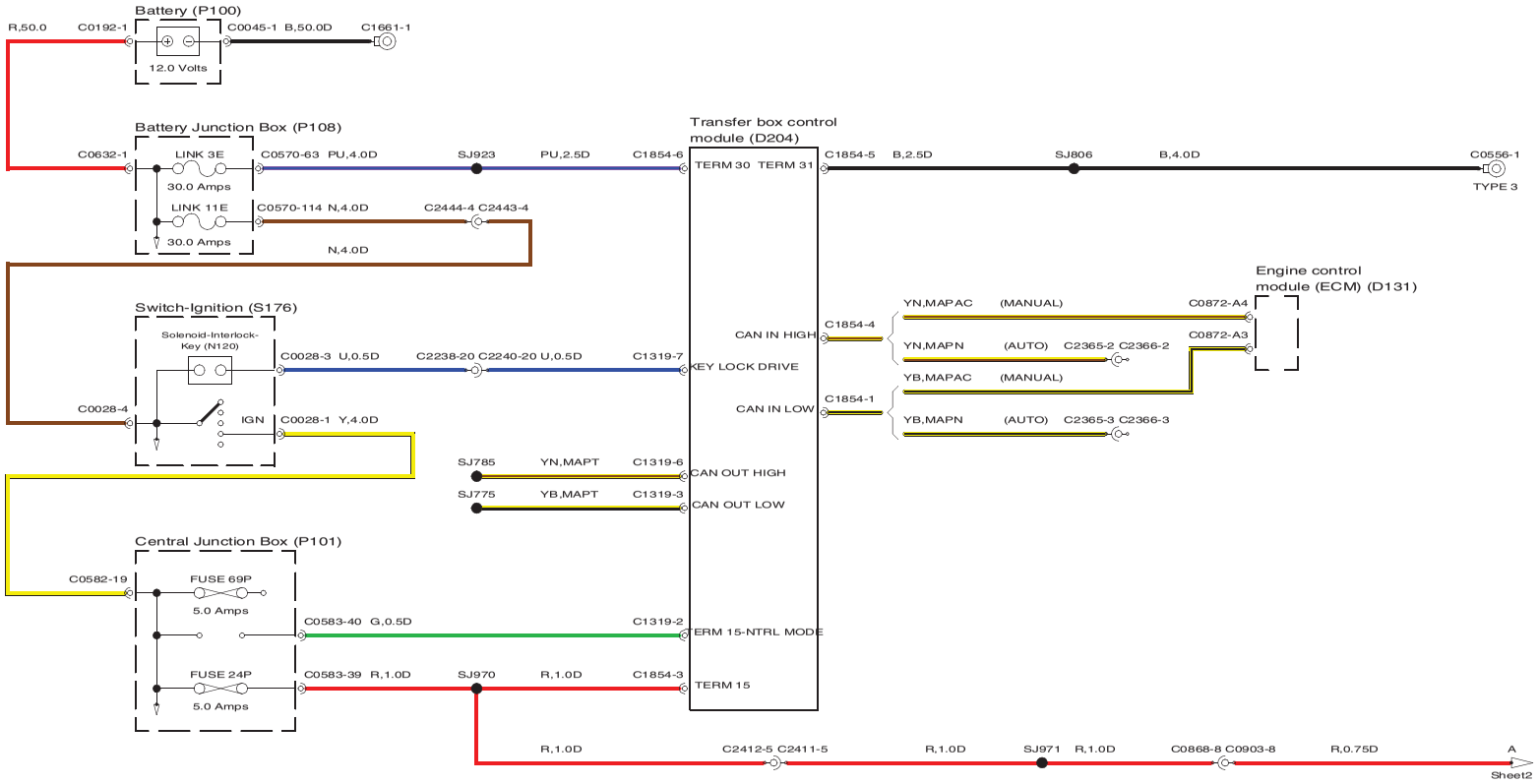
Battery (P100)
R,50.0
C0192-1
C0045-1 B,50.0D
C1661-1
12.0 Volts
Battery Junction Box (P108)
C0632-1
LINK 3E
30.0 Amps
C0570-63 PU,4.0D
SJ923
PU,2.5D
C1854-6
LINK 11E
30.0 Amps
C0570-114 N,4.0D
C2444-4 C2443-4
N,4.0D
Transfer box control module (D204)
TERM 30 TERM 31
C1854-5 B,2.5D
SJ806
B,4.0D
C0556-1
TYPE 3
Engine control module (ECM) (D131)
Switch-Ignition (S176)
Solenoid-Interlock-Key (N120)
C0028-3 U,0.5D
C2238-20 C2240-20 U,0.5D
C1319-7
KEY LOCK DRIVE
C0028-4
IGN
C0028-1 Y,4.0D
CAN IN HIGH
C1854-4
YN,MAPAC (MANUAL)
C0872-A4
YN,MAPN (AUTO) C2365-2 C2366-2
C0872-A3
YB,MAPAC (MANUAL)
CAN IN LOW
C1854-1
YB,MAPN (AUTO) C2365-3 C2366-3
SJ785 YN,MAPT C1319-6
CAN OUT HIGH
SJ775 YB,MAPT C1319-3
CAN OUT LOW
Central Junction Box (P101)
C0582-19
FUSE 69P
5.0 Amps
C0583-40 G,0.5D
C1319-2
TERM 15-NTRL MODE
FUSE 24P
5.0 Amps
C0583-39 R,1.0D
SJ970
R,1.0D
C1854-3
TERM 15
R,1.0D
C2412-5 C2411-5
R,1.0D
SJ971 R,1.0D
C0868-8 C0903-8
R,0.75D
A
Sheet2

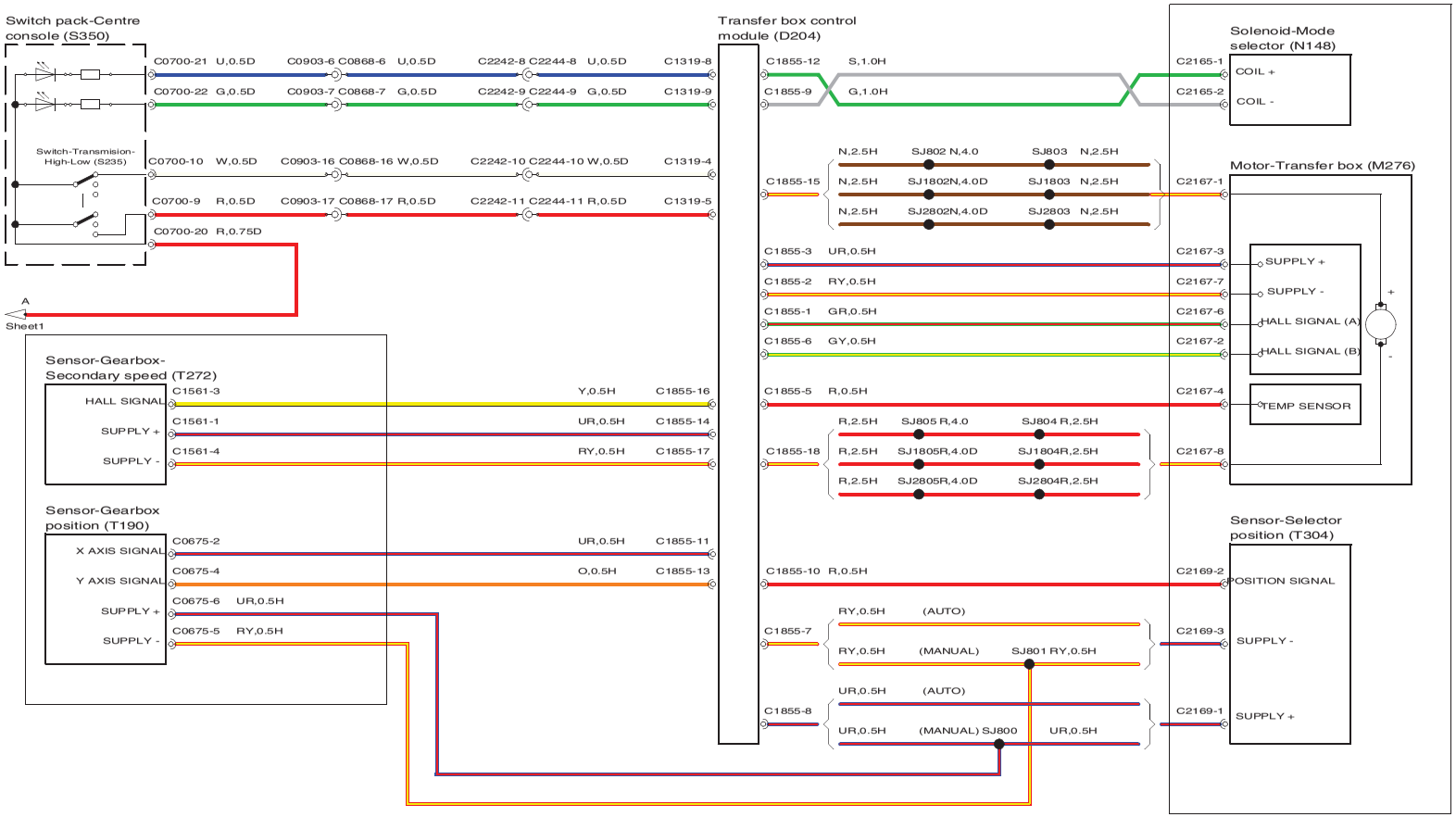
Switch pack-Centre console (S350)
Switch-Transmision-High-Low (S235)
C0700-21 U,0.5D C0903-6 C0868-6 U,0.5D C2242-8 C2244-8 U,0.5D C1319-8
C0700-22 G,0.5D C0903-7 C0868-7 G,0.5D C2242-9 C2244-9 G,0.5D C1319-9
C0700-10 W,0.5D C0903-16 C0868-16 W,0.5D C2242-10 C2244-10 W,0.5D C1319-4
C0700-9 R,0.5D C0903-17 C0868-17 R,0.5D C2242-11 C2244-11 R,0.5D C1319-5
C0700-20 R,0.75D
A
Sheet1
Transfer box control module (D204)
C1855-12 S,1.0H
C1855-9 G,1.0H
C1855-15
N,2.5H SJ802 N,4.0 SJ803 N,2.5H
N,2.5H SJ1802N,4.0D SJ1803 N,2.5H
N,2.5H SJ2802N,4.0D SJ2803 N,2.5H
C1855-3 UR,0.5H
C1855-2 RY,0.5H
C1855-1 GR,0.5H
C1855-6 GY,0.5H
C1855-5 R,0.5H
C1855-18
R,2.5H SJ805 R,4.0 SJ804 R,2.5H
R,2.5H SJ1805R,4.0D SJ1804R,2.5H
R,2.5H SJ2805R,4.0D SJ2804R,2.5H
C1855-10 R,0.5H
C1855-7
RY,0.5H (AUTO)
RY,0.5H (MANUAL) SJ801 RY,0.5H
C1855-8
UR,0.5H (AUTO)
UR,0.5H (MANUAL) SJ800 UR,0.5H
Solenoid-Mode selector (N148)
C2165-1 COIL +
C2165-2 COIL -
Motor-Transfer box (M276)
C2167-1
C2167-3 SUPPLY +
C2167-7 SUPPLY -
C2167-6 HALL SIGNAL (A)
C2167-2 HALL SIGNAL (B)
C2167-4 TEMP SENSOR
C2167-8
Sensor-Selector position (T304)
C2169-2 POSITION SIGNAL
C2169-3 SUPPLY -
C2169-1 SUPPLY +
Sensor-Gearbox-Secondary speed (T272)
HALL SIGNAL C1561-3 Y,0.5H C1855-16
SUPPLY + C1561-1 UR,0.5H C1855-14
SUPPLY - C1561-4 RY,0.5H C1855-17
Sensor-Gearbox position (T190)
X AXIS SIGNAL C0675-2 UR,0.5H C1855-11
Y AXIS SIGNAL C0675-4 O,0.5H C1855-13
SUPPLY + C0675-6 UR,0.5H
SUPPLY - C0675-5 RY,0.5H