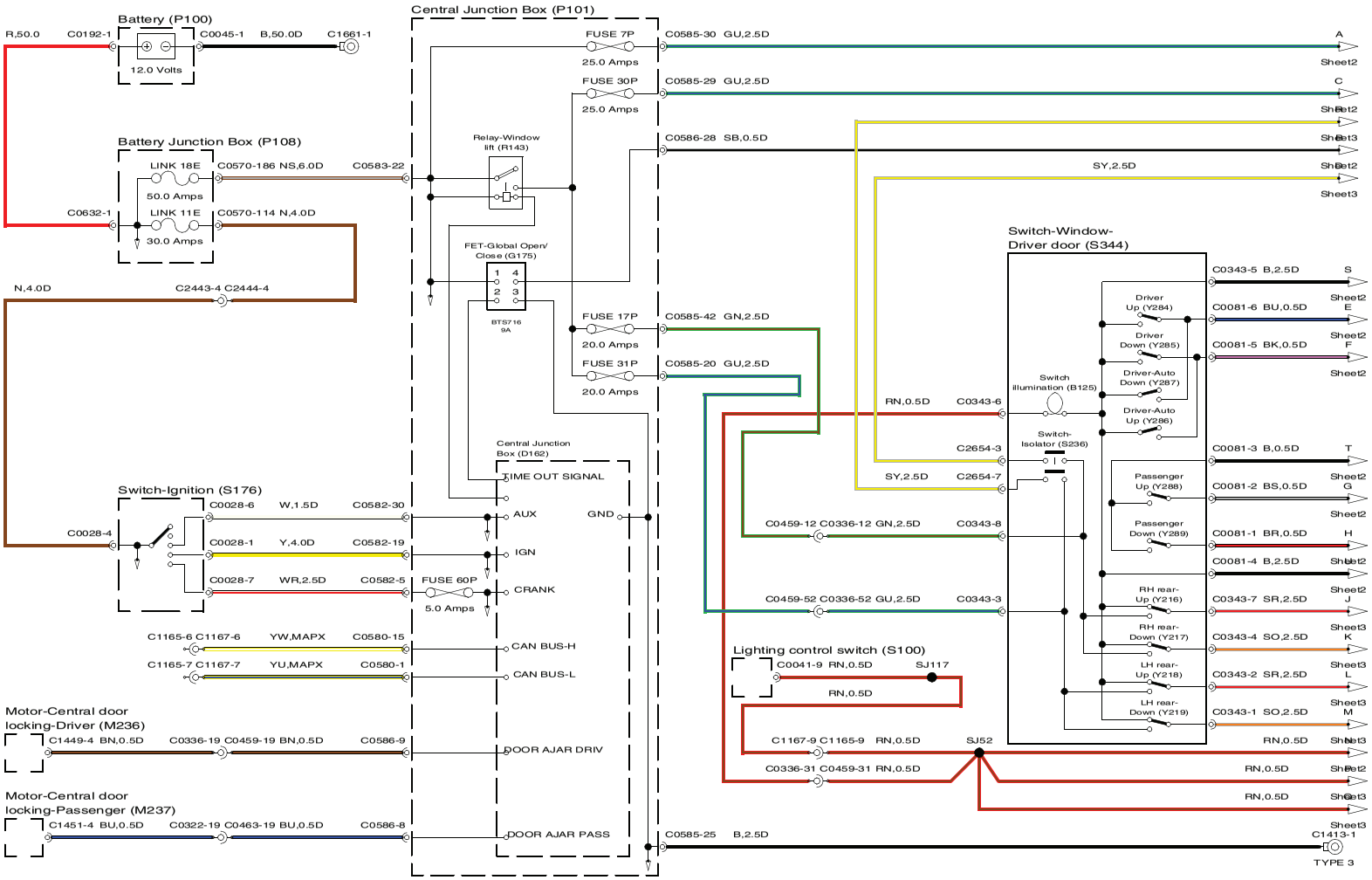
Battery (P100)
12.0 Volts
R,50.0
C0192-1
C0045-1
B,50.0D
C1661-1
Battery Junction Box (P108)
LINK 18E
50.0 Amps
LINK 11E
30.0 Amps
C0570-186 NS,6.0D
C0583-22
C0632-1
C0570-114 N,4.0D
N,4.0D
C2443-4 C2444-4
Central Junction Box (P101)
FUSE 7P
25.0 Amps
FUSE 30P
25.0 Amps
Relay-Window lift (R143)
FET-Global Open/ Close (G175)
BTS716 9A
FUSE 17P
20.0 Amps
FUSE 31P
20.0 Amps
C0585-30 GU,2.5D
C0585-29 GU,2.5D
C0586-28 SB,0.5D
C0585-42 GN,2.5D
C0585-20 GU,2.5D
Central Junction Box (D162)
TIME OUT SIGNAL
AUX
GND
IGN
CRANK
FUSE 60P
5.0 Amps
CAN BUS-H
CAN BUS-L
DOOR AJAR DRIV
DOOR AJAR PASS
Switch-Ignition (S176)
C0028-4
C0028-6 W,1.5D C0582-30
C0028-1 Y,4.0D C0582-19
C0028-7 WR,2.5D C0582-5
C1165-6 C1167-6 YW,MAPX C0580-15
C1165-7 C1167-7 YU,MAPX C0580-1
Motor-Central door locking-Driver (M236)
C1449-4 BN,0.5D C0336-19 C0459-19 BN,0.5D C0586-9
Motor-Central door locking-Passenger (M237)
C1451-4 BU,0.5D C0322-19 C0463-19 BU,0.5D C0586-8
C0585-25 B,2.5D
C1413-1
TYPE 3
Switch-Window-Driver door (S344)
Driver Up (Y284)
Driver Down (Y285)
Driver-Auto Down (Y287)
Driver-Auto Up (Y286)
Switch illumination (B125)
Switch-Isolator (S236)
Passenger Up (Y288)
Passenger Down (Y289)
RH rear-Up (Y216)
RH rear-Down (Y217)
LH rear-Up (Y218)
LH rear-Down (Y219)
C0343-5 B,2.5D
C0081-6 BU,0.5D
C0081-5 BK,0.5D
C0081-3 B,0.5D
C0081-2 BS,0.5D
C0081-1 BR,0.5D
C0081-4 B,2.5D
C0343-7 SR,2.5D
C0343-4 SO,2.5D
C0343-2 SR,2.5D
C0343-1 SO,2.5D
RN,0.5D C0343-6
C2654-3
SY,2.5D C2654-7
C0459-12 C0336-12 GN,2.5D C0343-8
C0459-52 C0336-52 GU,2.5D C0343-3
Lighting control switch (S100)
C0041-9 RN,0.5D SJ117
RN,0.5D
C1167-9 C1165-9 RN,0.5D SJ52
C0336-31 C0459-31 RN,0.5D
SY,2.5D
RN,0.5D
Sheet2
Sheet3

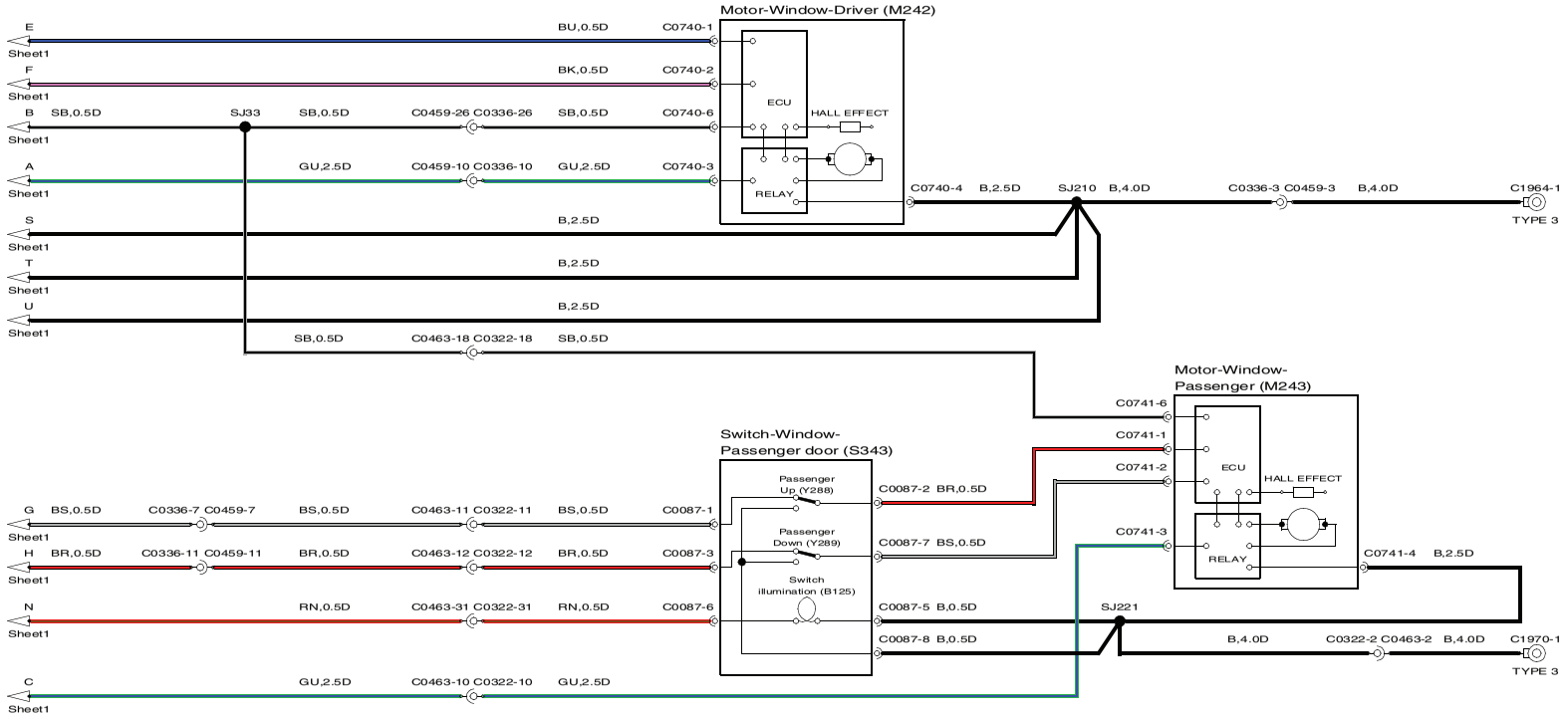
Motor-Window-Driver (M242)
ECU
HALL EFFECT
RELAY
E
F
B
A
S
T
U
G
H
N
C
Sheet1
BU,0.5D
BK,0.5D
SB,0.5D
SJ33
C0740-1
C0740-2
C0740-6
C0740-3
C0459-26 C0336-26
GU,2.5D
C0459-10 C0336-10
B,2.5D
C0740-4
SJ210
B,4.0D
C0336-3 C0459-3
C1964-1
TYPE 3
C0463-18 C0322-18
Motor-Window-
Passenger (M243)
C0741-6
C0741-1
C0741-2
C0741-3
C0741-4
Switch-Window-
Passenger door (S343)
Passenger
Up (Y288)
Passenger
Down (Y289)
Switch
illumination (B125)
C0336-7 C0459-7
C0463-11 C0322-11
C0087-1
C0087-2
BR,0.5D
C0087-7
BS,0.5D
C0336-11 C0459-11
C0463-12 C0322-12
C0087-3
RN,0.5D
C0463-31 C0322-31
C0087-6
C0087-5
C0087-8
SJ221
C0322-2 C0463-2
C1970-1
C0463-10 C0322-10

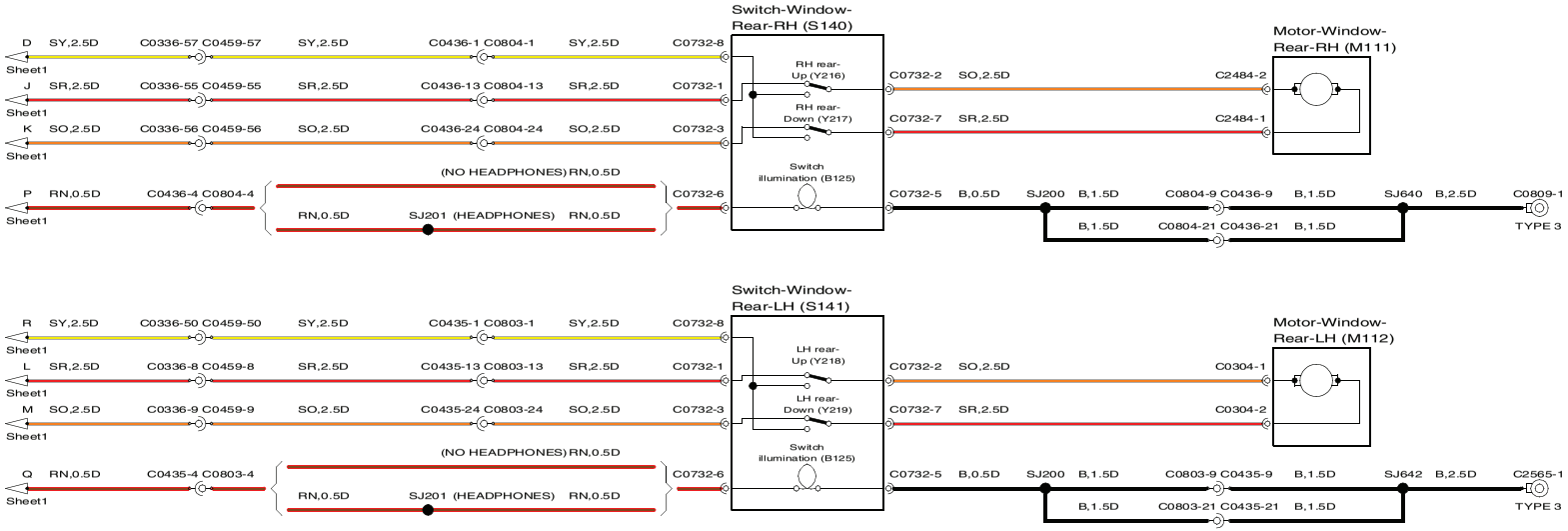
Switch-Window-Rear-RH (S140)
Motor-Window-Rear-RH (M111)
D SY,2.5D C0336-57 C0459-57 SY,2.5D C0436-1 C0804-1 SY,2.5D C0732-8
Sheet1
J SR,2.5D C0336-55 C0459-55 SR,2.5D C0436-13 C0804-13 SR,2.5D C0732-1
Sheet1
K SO,2.5D C0336-56 C0459-56 SO,2.5D C0436-24 C0804-24 SO,2.5D C0732-3
Sheet1
P RN,0.5D C0436-4 C0804-4
Sheet1
(NO HEADPHONES) RN,0.5D
RN,0.5D SJ201 (HEADPHONES) RN,0.5D
C0732-6
RH rear-Up (Y216)
RH rear-Down (Y217)
Switch illumination (B125)
C0732-2 SO,2.5D C2484-2
C0732-7 SR,2.5D C2484-1
C0732-5 B,0.5D SJ200 B,1.5D C0804-9 C0436-9 B,1.5D SJ640 B,2.5D C0809-1
B,1.5D C0804-21 C0436-21 B,1.5D
TYPE 3
Switch-Window-Rear-LH (S141)
Motor-Window-Rear-LH (M112)
R SY,2.5D C0336-50 C0459-50 SY,2.5D C0435-1 C0803-1 SY,2.5D C0732-8
Sheet1
L SR,2.5D C0336-8 C0459-8 SR,2.5D C0435-13 C0803-13 SR,2.5D C0732-1
Sheet1
M SO,2.5D C0336-9 C0459-9 SO,2.5D C0435-24 C0803-24 SO,2.5D C0732-3
Sheet1
Q RN,0.5D C0435-4 C0803-4
Sheet1
(NO HEADPHONES) RN,0.5D
RN,0.5D SJ201 (HEADPHONES) RN,0.5D
C0732-6
LH rear-Up (Y218)
LH rear-Down (Y219)
Switch illumination (B125)
C0732-2 SO,2.5D C0304-1
C0732-7 SR,2.5D C0304-2
C0732-5 B,0.5D SJ200 B,1.5D C0803-9 C0435-9 B,1.5D SJ642 B,2.5D C2565-1
B,1.5D C0803-21 C0435-21 B,1.5D
TYPE 3